Analog/Digital Guitar Synthesizer

Erin Browning
Matthew Mohn
Michael Senejoa

Project Definition

To use a guitar as a functional controller for an analog/digital synthesizer by taking information from a guitar as it's being played and create separate, fully controllable signals for each string.

Goals/Requirements

- Musicality
- Accuracy – must sound in tune
- Playability – real time, to be used as a live instrument
- Portability – a musician must be able to take it on the road and set up quickly
- Controllable – must give the user options to modulate/control the synthesized signals by on-board controls

Specifications

- Intonation – Within 3% of the note value's frequency
- Synthesize full frequency range of guitar – 82.4Hz to 1046.5Hz
- +/- 12V power supply
- Low Frequency oscillator with range from 3 to 33Hz
- <50ms delay from initial input to final synthesized note
- Microcontroller CPU speed 1MHz minimum

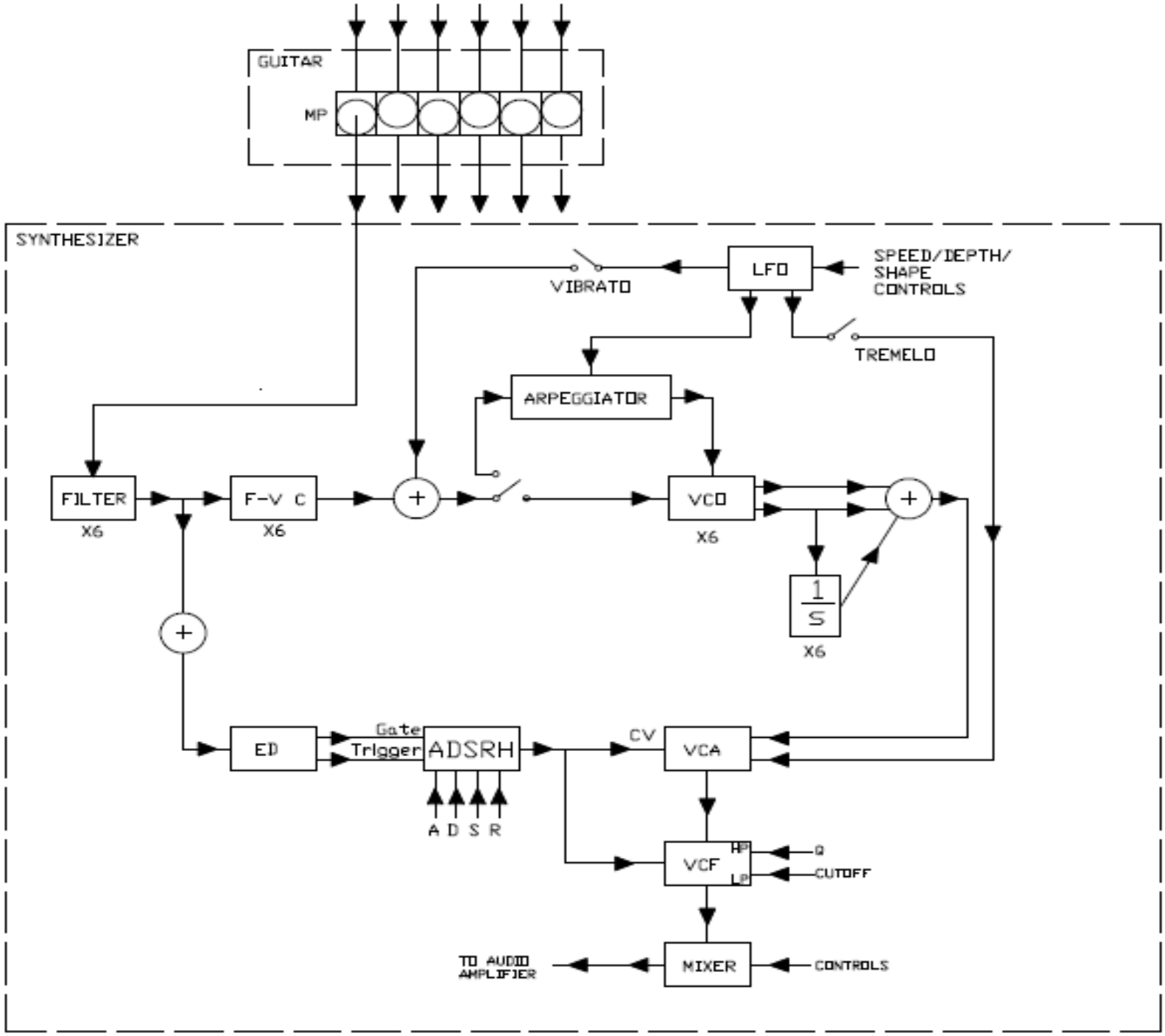
GUITAR
MP
SYNTHESIZER
VIBRATO
LFO
SPEED/DEPTH/
SHAPE
CONTROLS
TREMELO
ARPEGGIATOR
FILTER
X6
F-V C
X6
VCO
X6
1
S
X6
ED
Gate
Trigger
ADSRH
A D S R
CV
VCA
VCF
HP
LP
Q
CUTOFF
TO AUDIO
AMPLIFIER
MIXER
CONTROLS

Multichannel Magnetic Pickup

- Acquire the original envelope of the signal.
- Acquire the original frequency of the signal
- AlNiCo magnets are an industry standard.
- #30 g magnetic wire
- 6 individual signals must be produced.
- VGA cable has 15 pins.
- Problems can occur with a weak signal

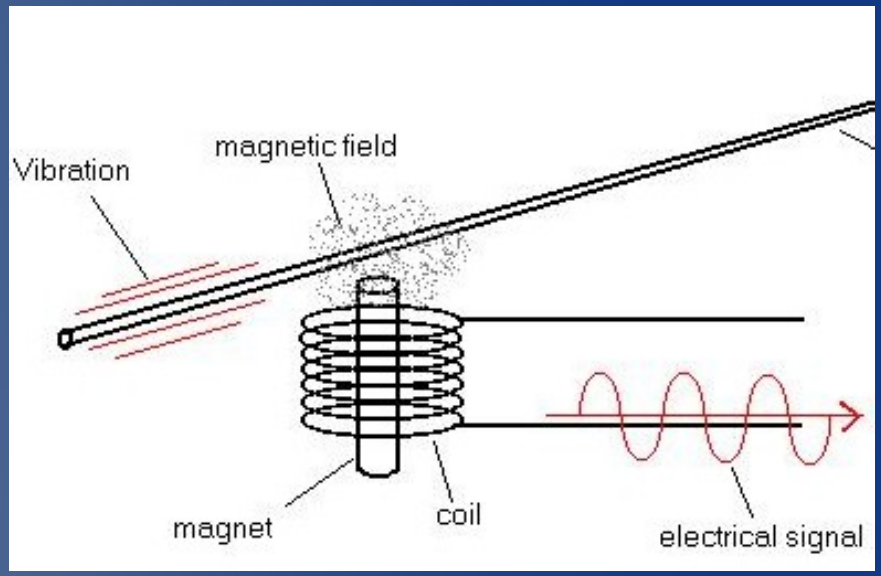

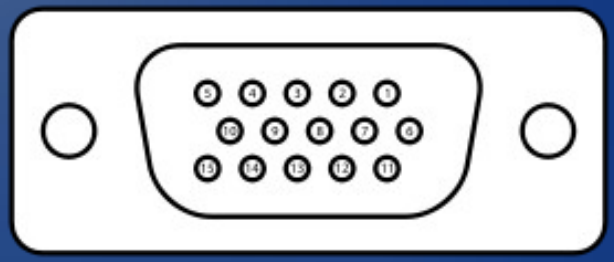

First Stage Filters

- Filter out naturally occurring harmonics from resonating guitar strings to allow for more accurate frequency tracking
- Must not completely filter out the 2nd harmonic, since this represents a valid note on the 12th fret (the octave)
- Must boost higher register on each string (shorter string, less energy = less volume and sustain for higher notes)
- Active notch filter centered at the 2nd harmonic of the open note on each string

Spectrum of lowest note on the E string (82.4Hz)

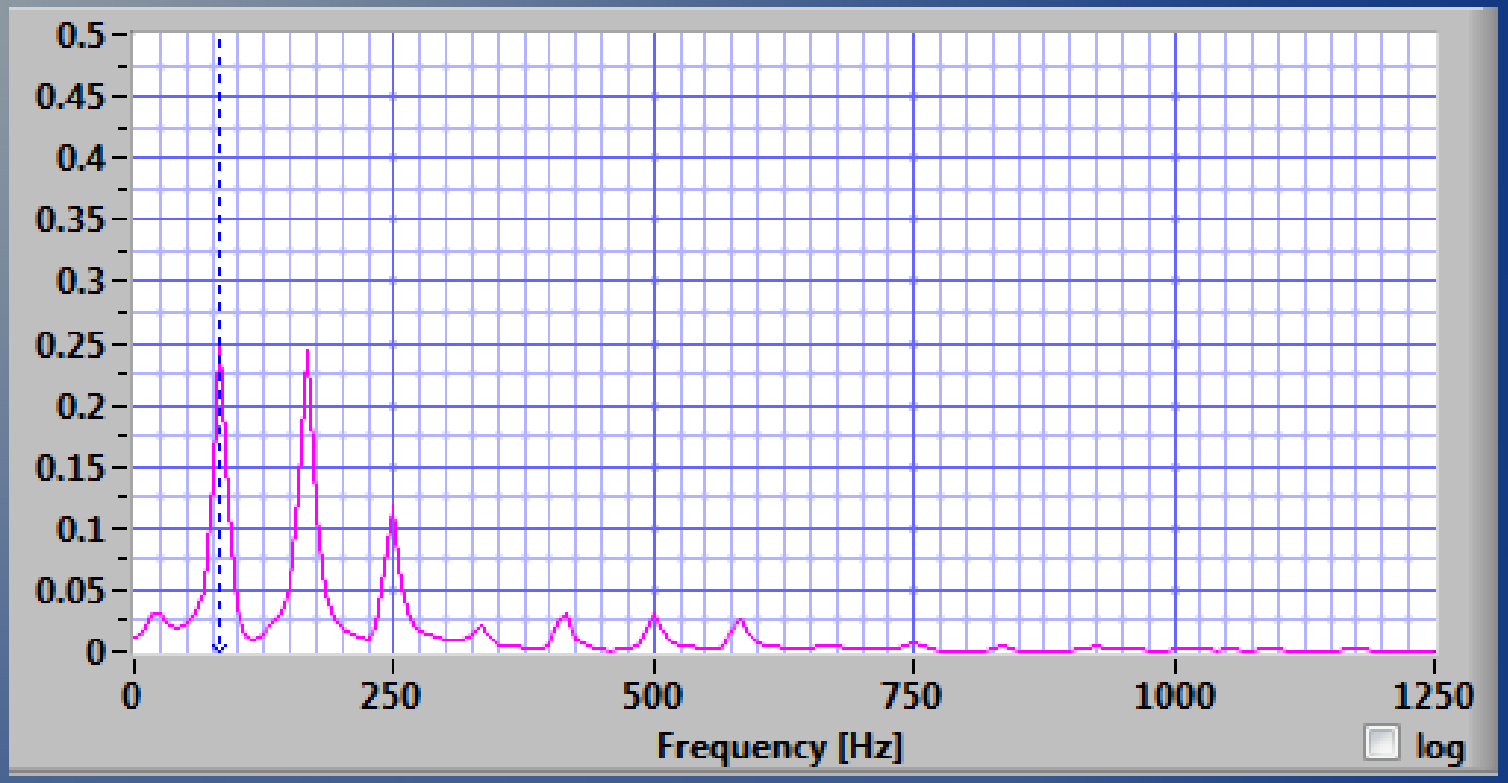

- Second harmonic is about as high as the fundamental
- Difficult to track frequency

Design

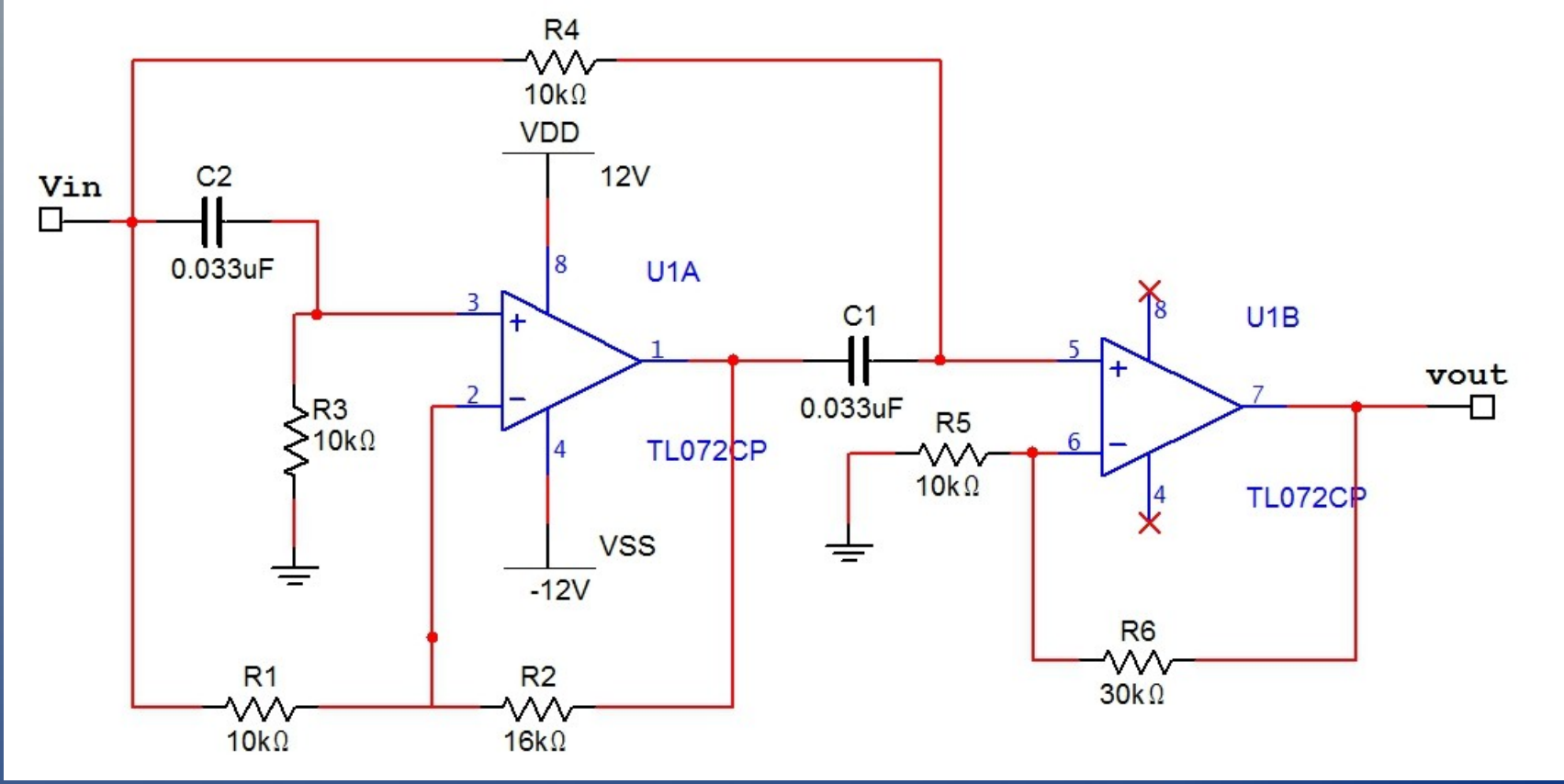

- First op amp is the notch filter, second stage is a gain stage of about 4
- Opamp are TL074 quad op amps to save space on PCB

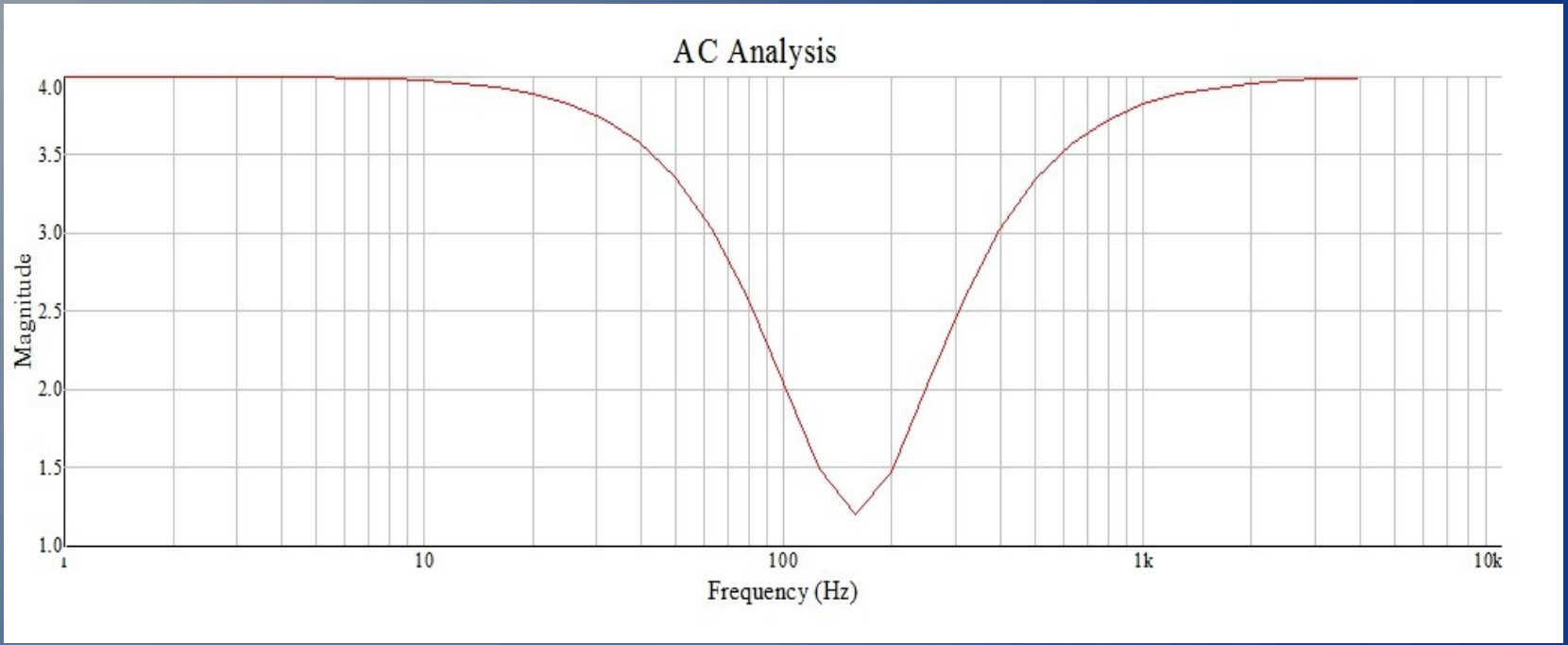

- Here: Low E string
- Gain of 2.5 for the lowest and highest notes on the string
- Gain of about 1.2 for the 12th fret. High enough gain for that particular note, but low enough in proportion to the lower fret's frequencies so that their second harmonics are overtaken by the fundamental.

Frequency to Voltage Converters
Requirements

- Linearly convert frequency of the individual guitar inputs to a voltage to be “read” by the VCO
- Must be accurate to within 3% of input (it must sound relatively "in tune")
- Each string will have a full range of 0 to 5V, designed up to the 20th fret

Design

- LM2907N frequency to voltage tachometer - 14pin dip
- Up to 28V supply range
- Designed specifically for variable reluctance magnetic pickups
- 0.3% linearity
- Easy design equation: Vout = Vcc * R1 * C1 * Fin,
- Useable range is about 1.6 to 5V from open to 20th fret

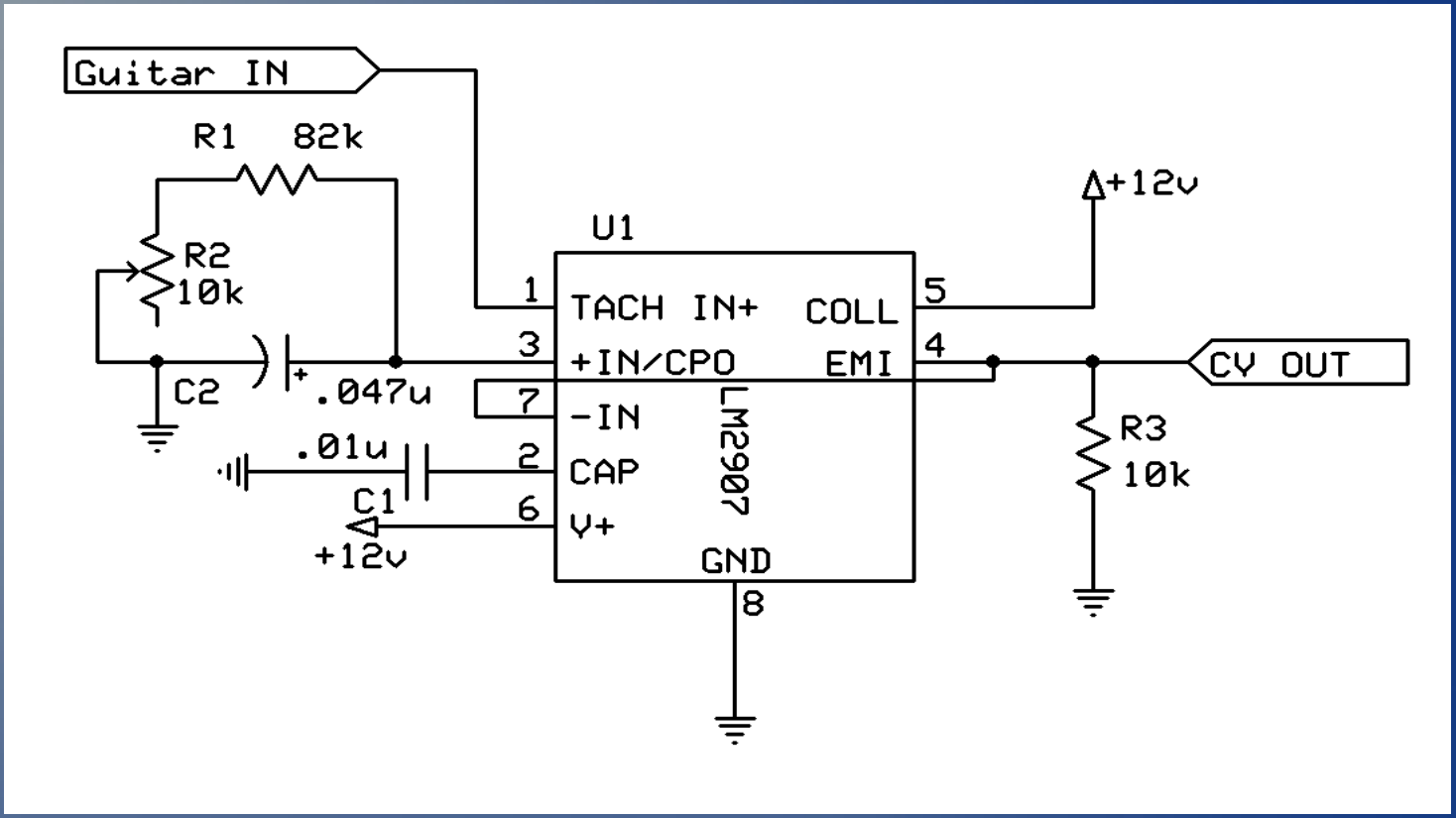

- C2 was selected to balance between quick response time and low ripple
- -the settling time is around 40ms. this might need to be shortened if the delay is too noticeable
- -even after "settling" there is still a ripple with twice the frequency of the input

Table of values for each string

Open	20th fret	Slope	R desired	R + 100k trimpot	C
82.41	261.63	0.0191	160k	100k	0.01uF
110	349.23	0.0144	120k	82k	0.01uF
146.83	466.16	0.0107	160k	100k	0.0056uF
196	622.25	0.0080	120k	82k	0.0056uF
246.94	783.99	0.0064	240k	180k	0.0022uF
329.63	1046.5	0.0048	180k	120k	0.0022uF

- Real-world component values selected
- Trim pot will be used to "tune" the circuit during testing

FVC Signal From Pickup

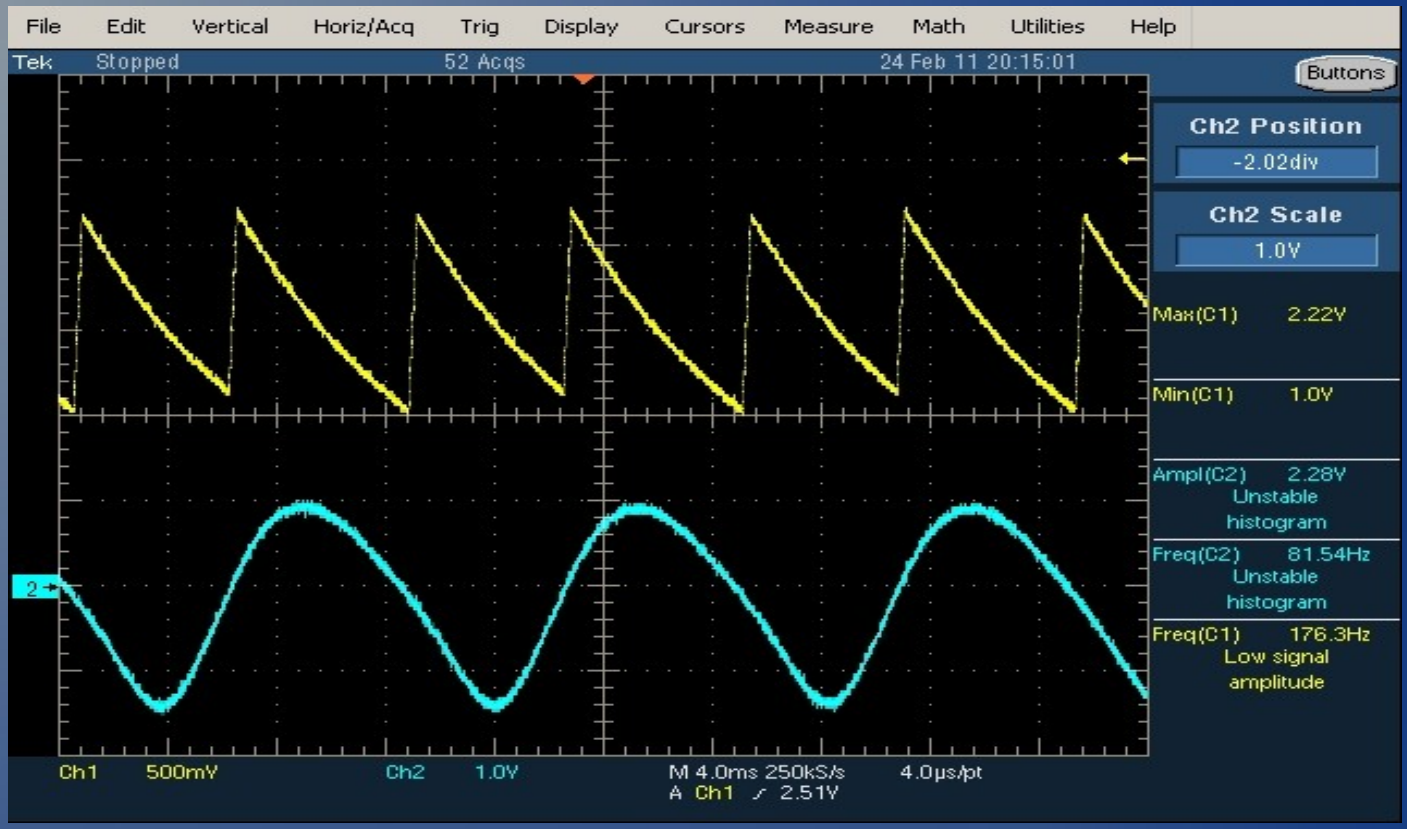

- Output ripple – would cause frequency variance problems of the VCO

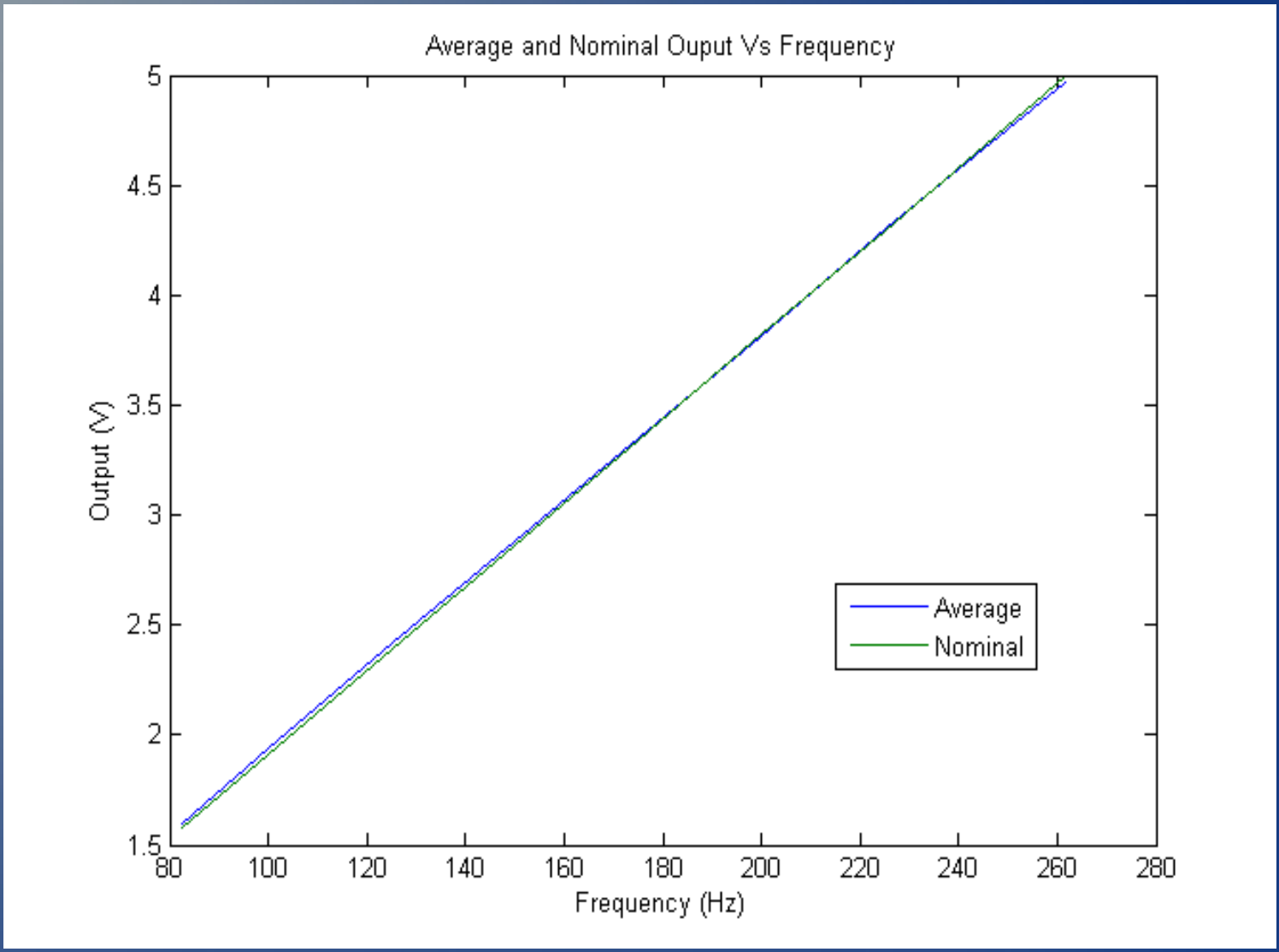

- 1.65% error on the low end, 0.05% error on high end
- Sensitivity to error decreases as frequency increases
- Error on low end is more critical

Overview

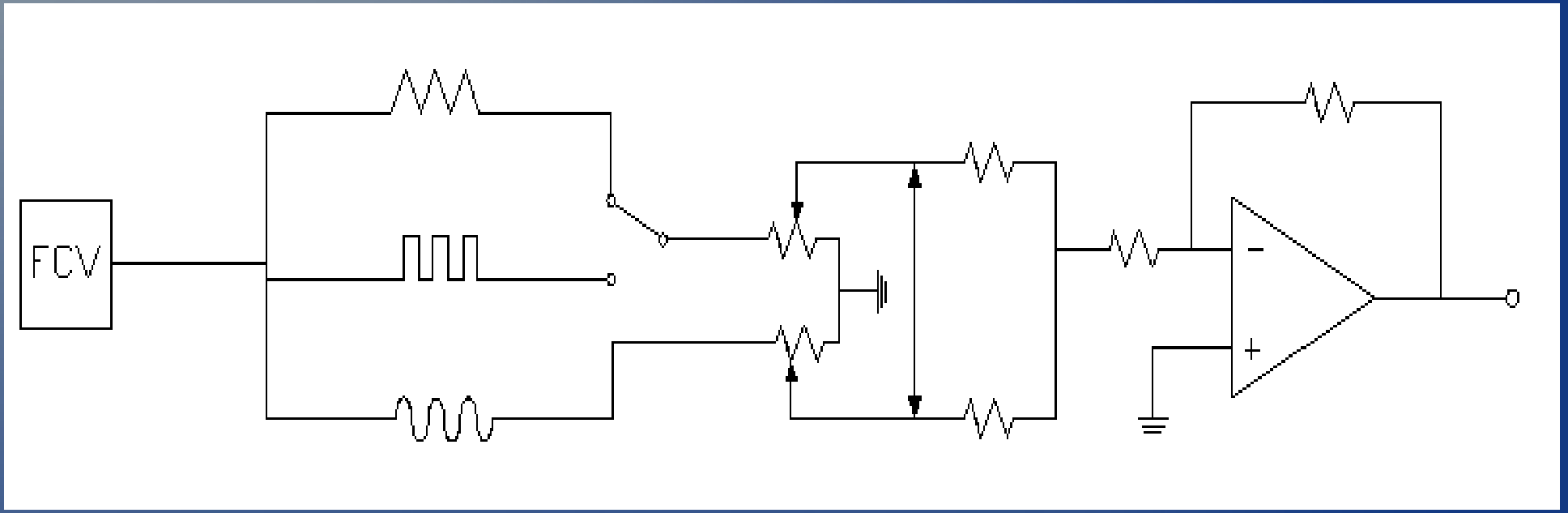

Wave Shaping Requirements

- Generate three waveforms of equal frequency, amplitude and peak-amplitude phase

  (Sine, Square, Triangle)
- Exclusively use analog components

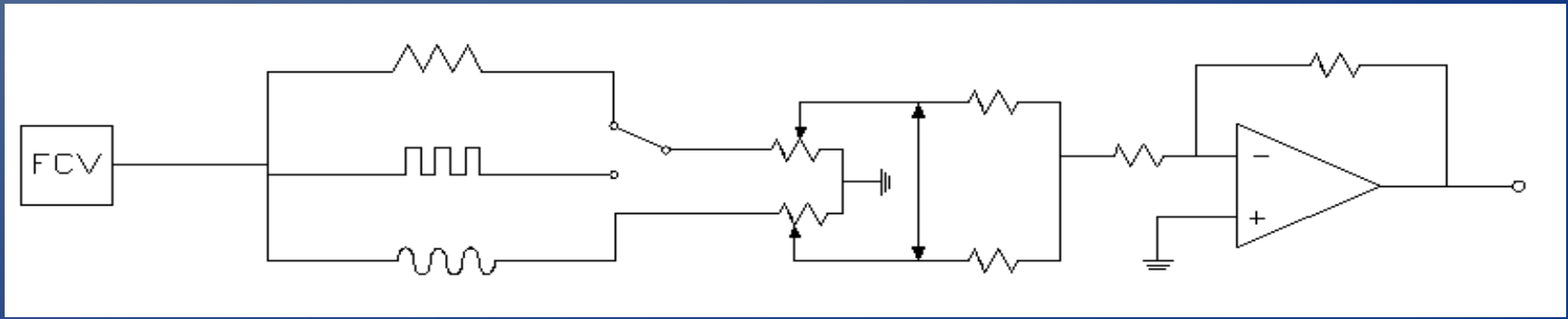

LM13700

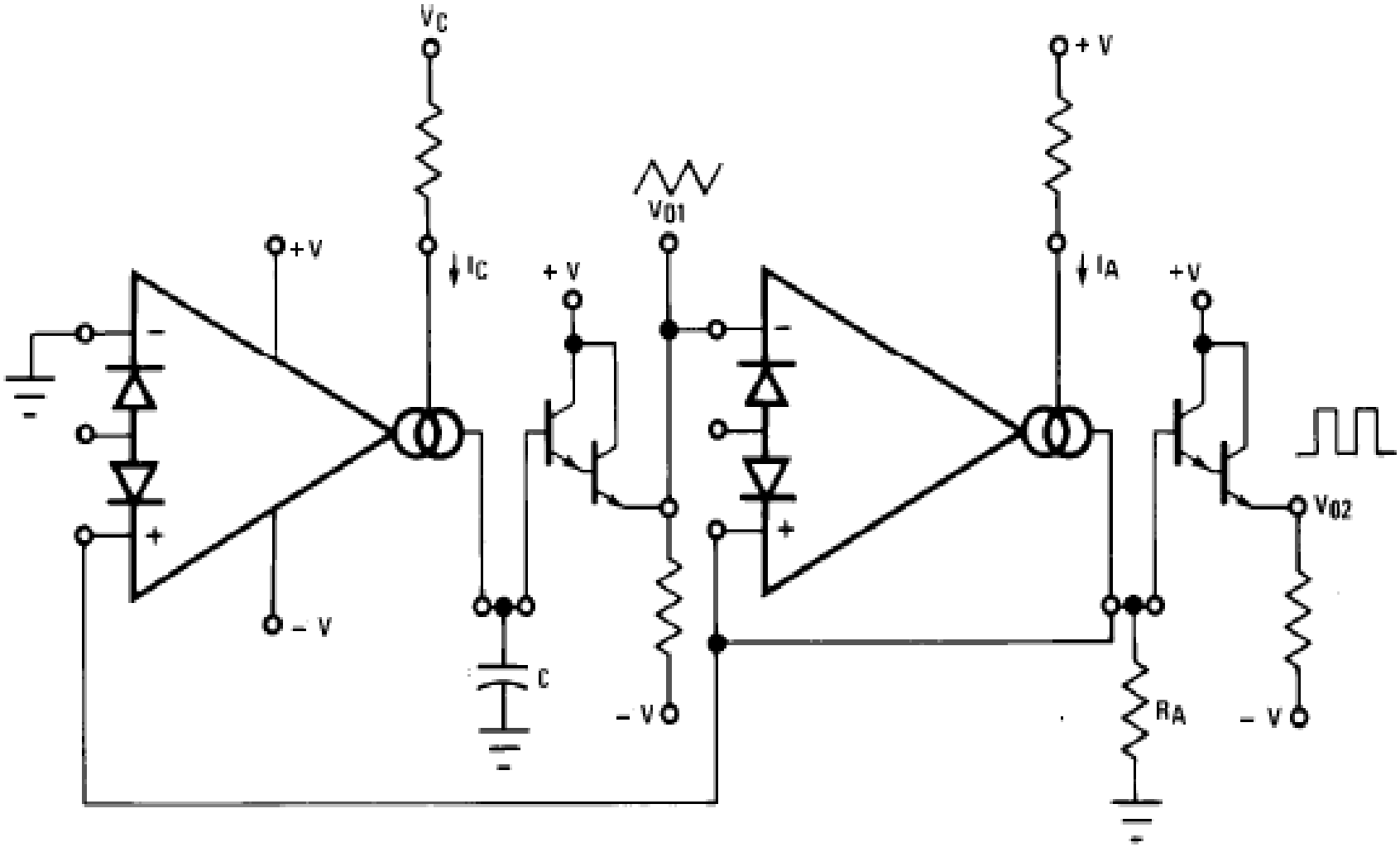

VCO Design Approach

$$f_{OSC} = \frac{I_C}{4CI_AR_A}$$

$$I_C = \frac{Vc-1.4-V-}{R} \rightarrow I_C = \frac{Vc+10.6}{R}$$

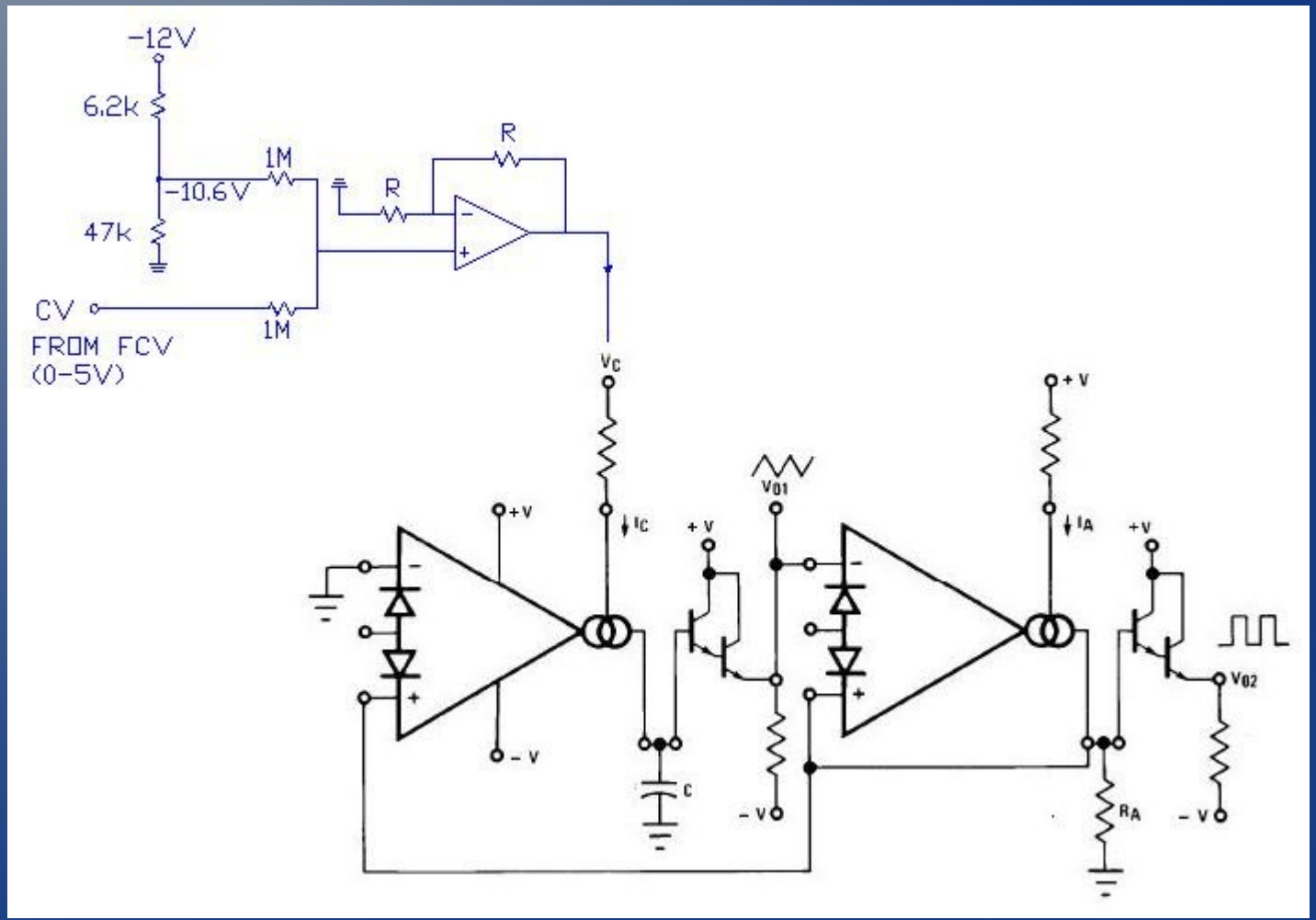

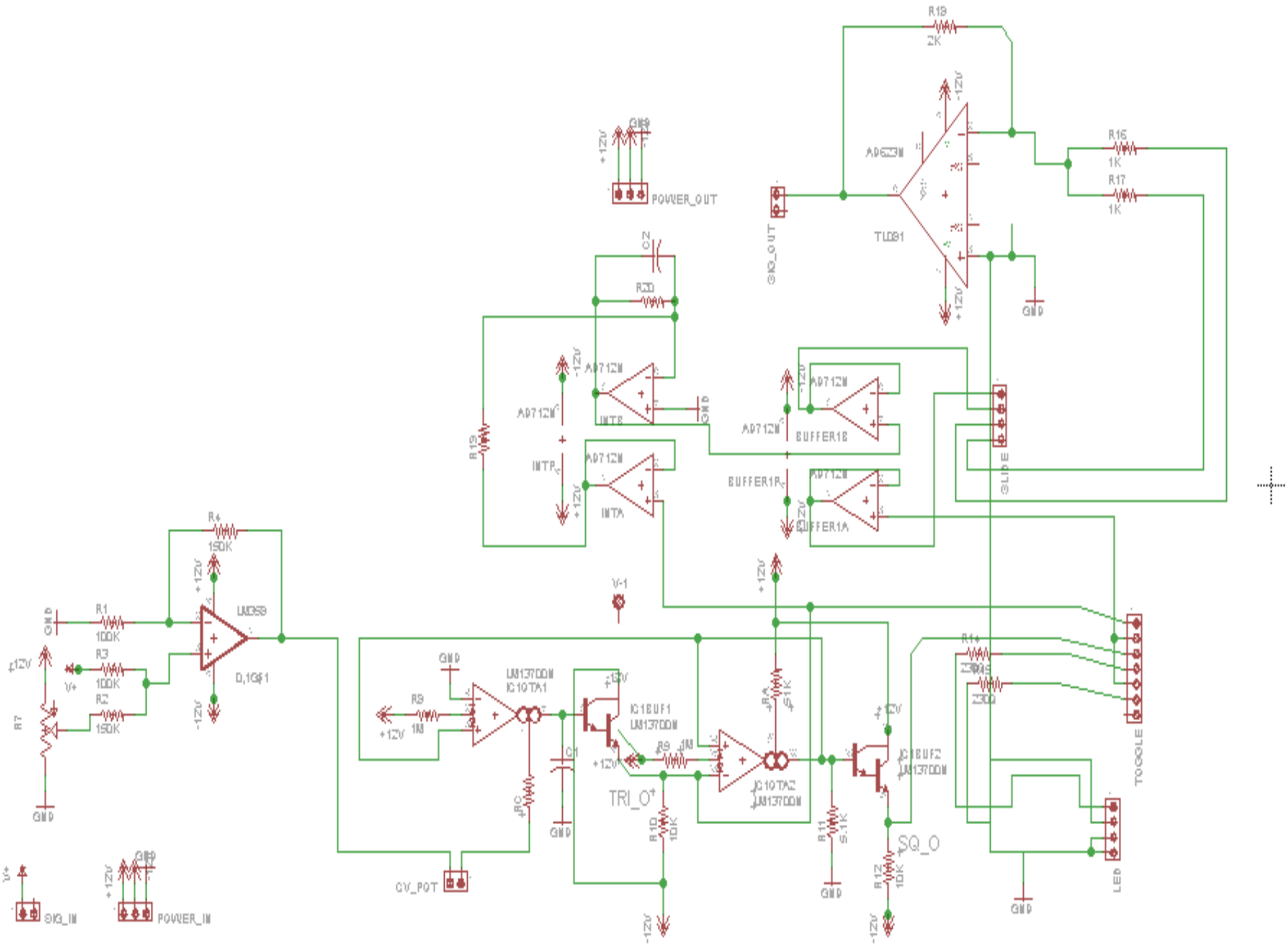

R19
2K
AD623N
TL081
R16
1K
R17
1K
SIG_OUT
GND
POWER_OUT
C2
R20
AD712N
INTB
INTP
INTA
BUFFER1B
BUFFER1P
BUFFER1A
SLIDE
R4
150K
R1
100K
R3
100K
R2
150K
R7
LM358
D,1GF1
V-1
LM13700N
IC10TA1
IC1BUF1
LM13700N
IC10TA2
LM13700N
IC1BUF2
LM13700N
R9
1M
C1
RC
TRI_O
R10
10K
R11
5.1K
R12
10K
SQ_O
R14
230Ω
TOGGLE
LED
CV_POT
SIG_IN
POWER_IN
+12V
-12V

Testing & Problems

Sine Wave Generator

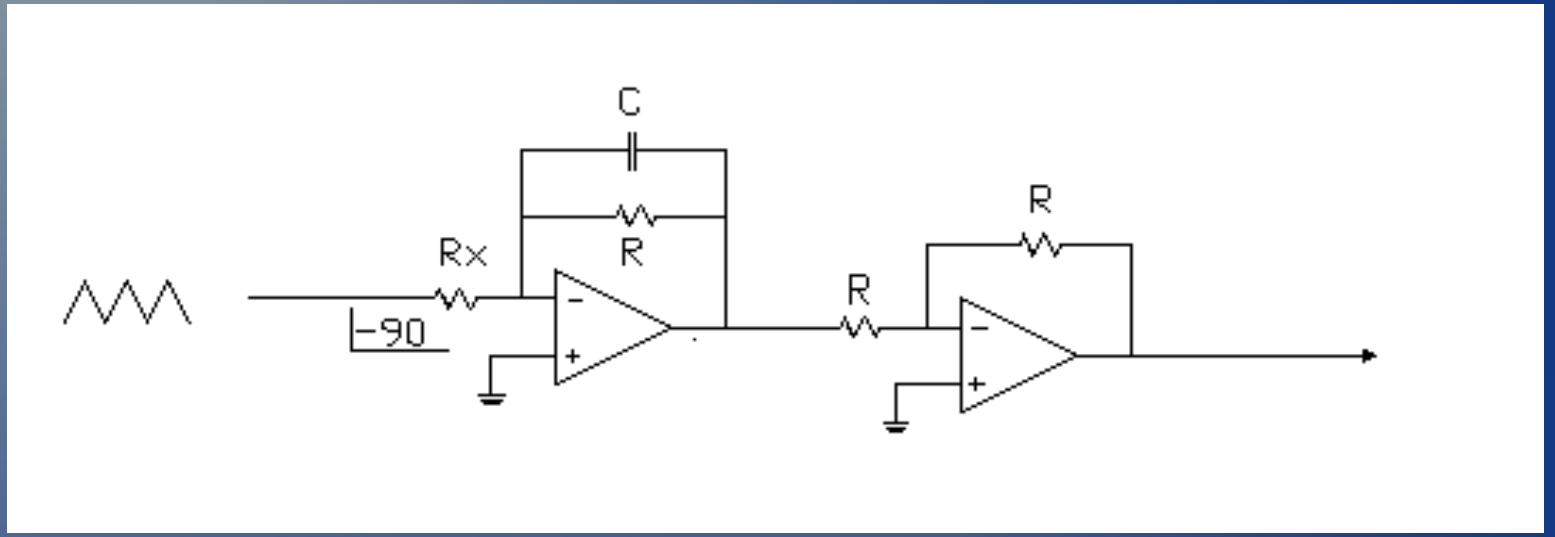

Integrator Design Approach

- Amplitude variation at different frequencies
- Design Rx and C based on center frequency
- $w=1/RxC$
- Match resistors R for gain of 1.41

Mixer Requirements

- Add two waveforms while maintaining unity gain
- Allow user to select between two waveforms to mix
  - Mix Triangle and Sine or
  - Mix Square and Sine
- LED's to indicate which waveform has been selected
- Allow proportion control between the two signals

Independent Mixing Stage

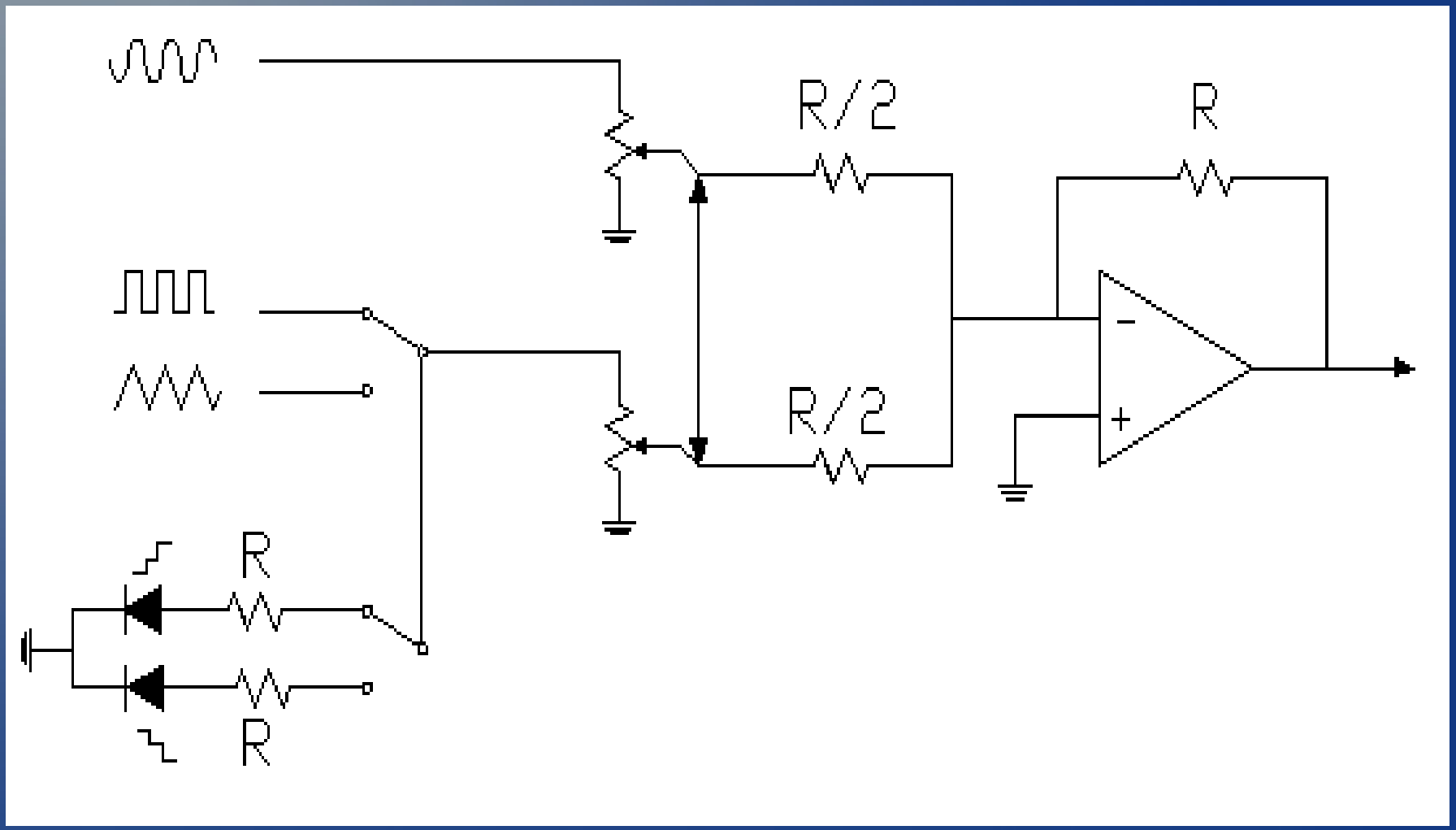

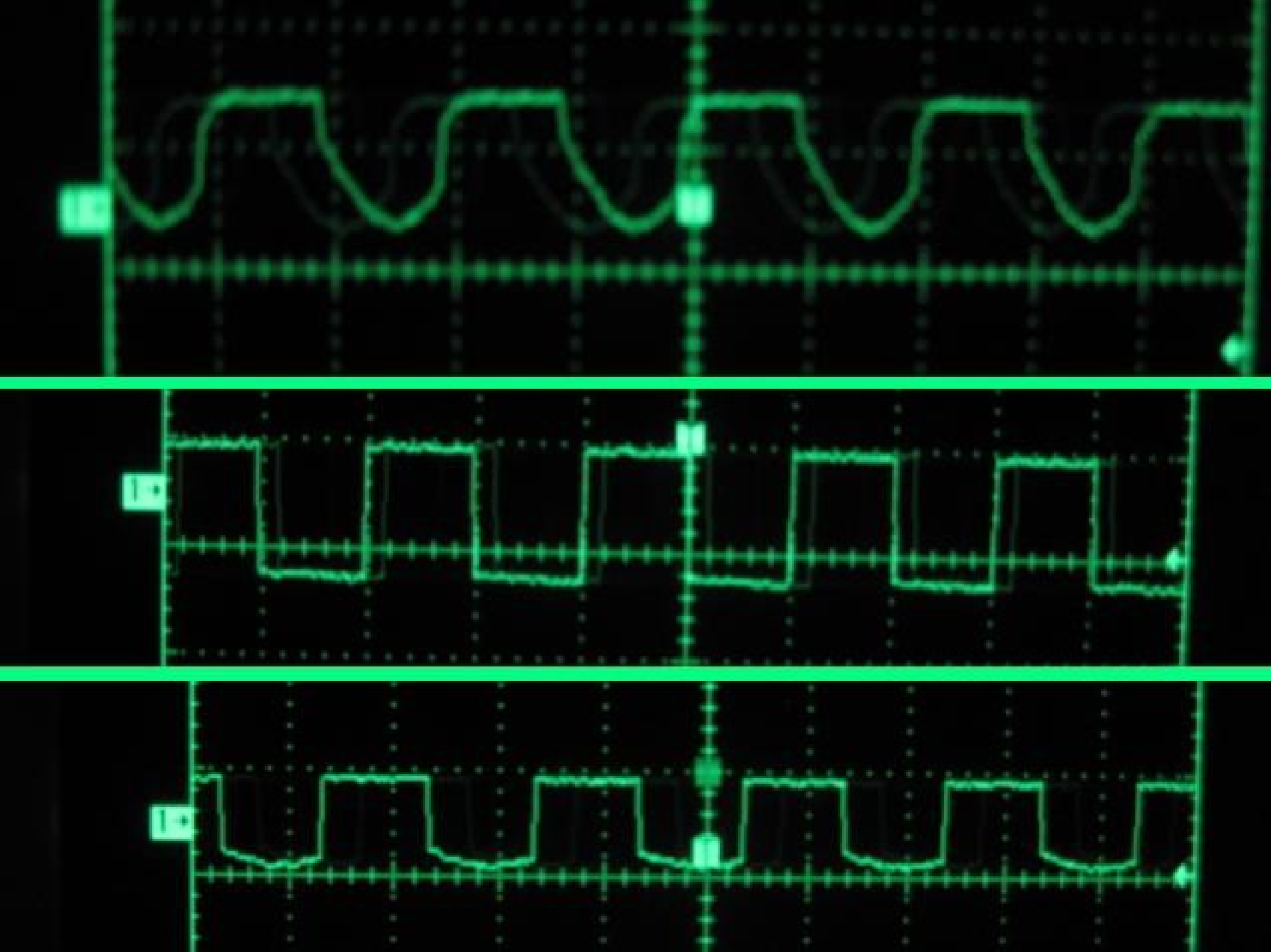

Triggers and Gates

Requirements

- The trigger is a binary pulse that is activated whenever a new note is hit on the guitar string
- Tells the sample/hold and ADSR blocks that a new note happened
- The gate is also a binary signal that is active whenever the pickups are sending signals
- Tells the sample/hold and ADSR blocks that a note is still being played

Design

- Simple envelope detector followed by two comparators - one for gate and one for trigger
- Inverting comparator using LM339 quad comparator
- Gate will have a voltage reference of about 150mV with hysteresis of about 100mV
- Trigger will be less sensitive, so that it is only high when a guitar string is plucked – about 1V vref
- The natural envelope of a plucked string falls sharply after the initial attack, causing the trigger to be a short pulse

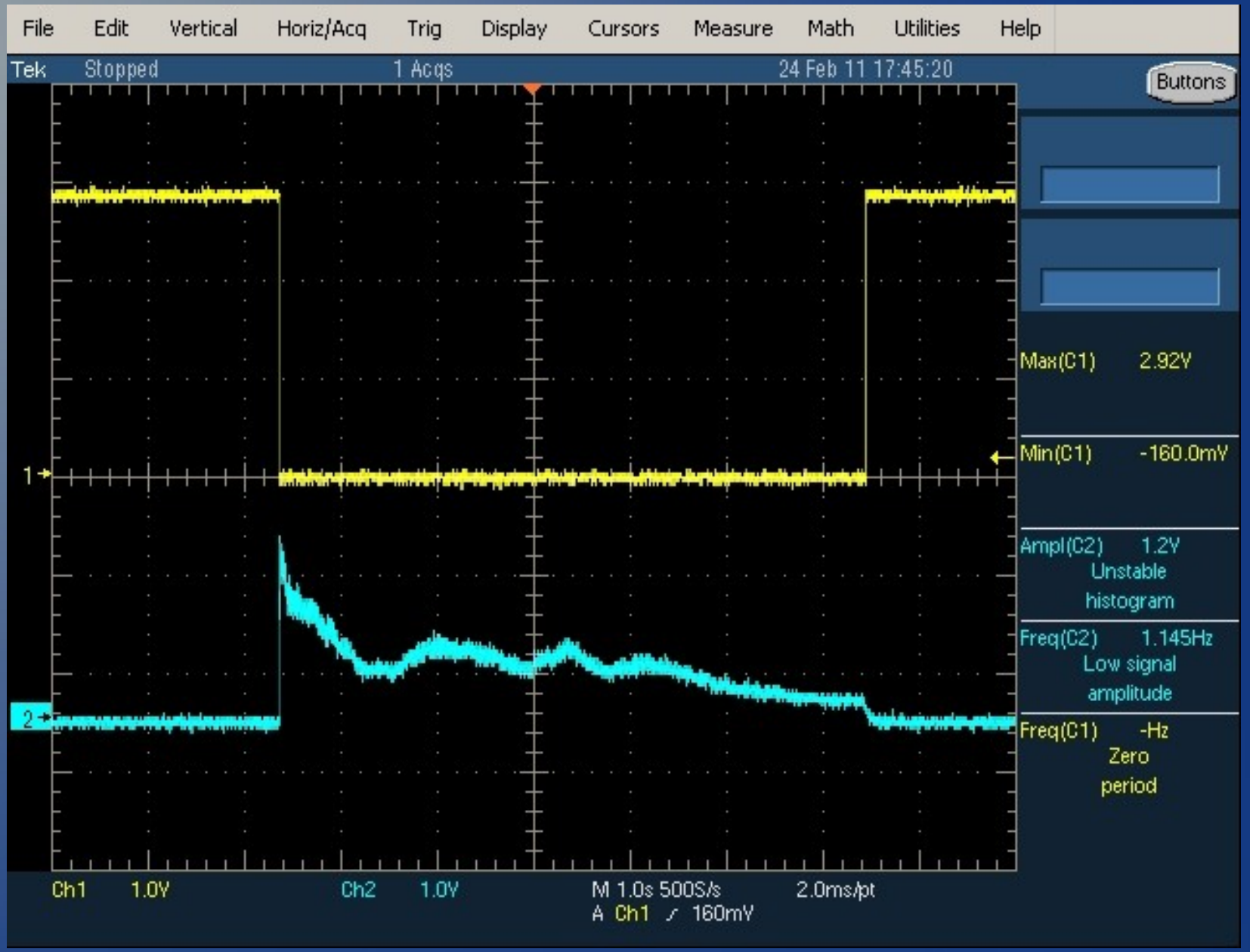
File
Edit
Vertical
Horiz/Acq
Trig
Display
Cursors
Measure
Math
Utilities
Help
Tek
Stopped
1 Acqs
24 Feb 11 17:45:20
Buttons
Max(C1) 2.92V
Min(C1) -160.0mV
Ampl(C2) 1.2V
Unstable
histogram
Freq(C2) 1.145Hz
Low signal
amplitude
Freq(C1) -Hz
Zero
period
1
2
Ch1 1.0V
Ch2 1.0V
M 1.0s 500S/s
2.0ms/pt
A Ch1 ⟋ 160mV

Microcontroller

- MSP430F4132 microcontroller
- 8KB Flash, 512B SRAM, 8MHz
- 56 GPIO, 64 pin LQFP package
- Has multiple port pin interrupts
- 8 10-bit ADC channels
- Outputs up to 6 PWM signals from capture/compare peripheral
- Will accept the trigger outputs as port pin interrupts
- Output will be filtered PWM signals sent to the VCO

MSP430 Development Board

- MSP430 Launchpad
- Cheap ($4.30), available, programmable in C using CCS compiler
- 64 pin breakout board for the MSP430F4132 (for testing only)
- Programmed by the Launchpad via Spy-bi-wire interface

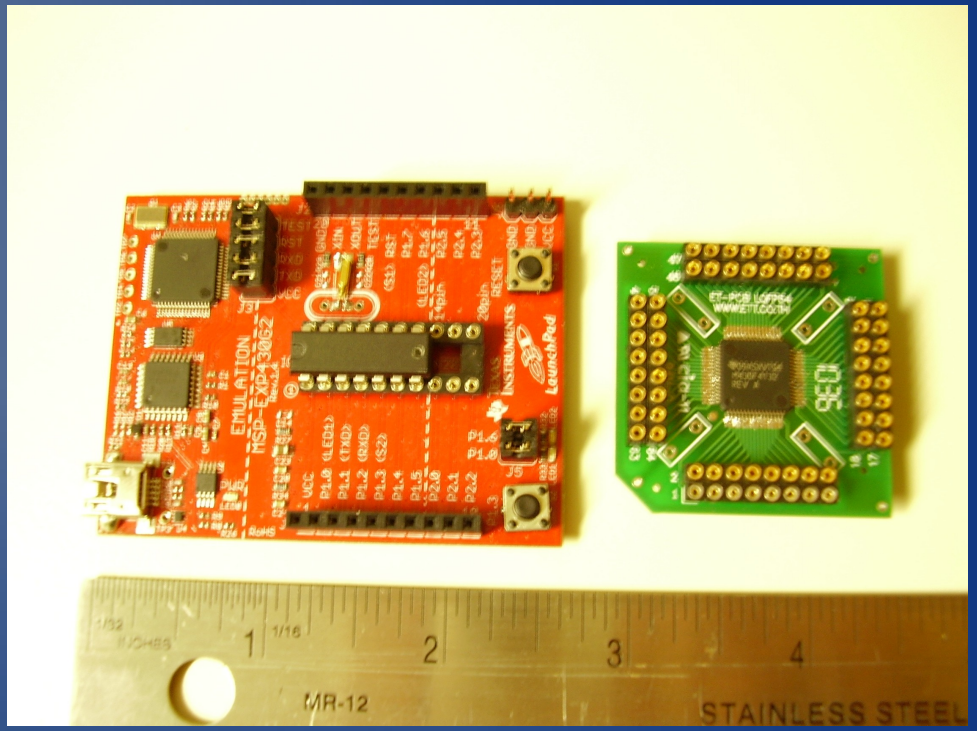

Voltage Controlled Amplifier (VCA)
Requirements

- To provide amplification that varies with a control voltage created by a contour generator
- Must be linear with respect to control voltage
- Have a flat frequency response of +/-1dB up to 20kHz
- Must produce undistorted output (no rail clipping)
- Minimum of unity gain
- Input offset voltage less than 1mV

Design

- VCA using the LM13700
- Input offset voltage of 0.4mV
- Control voltage is from the ADSR contour generator
- Control voltage will be amplified from 3.3V to about 5V and shifted down by about 8V from by an opamp

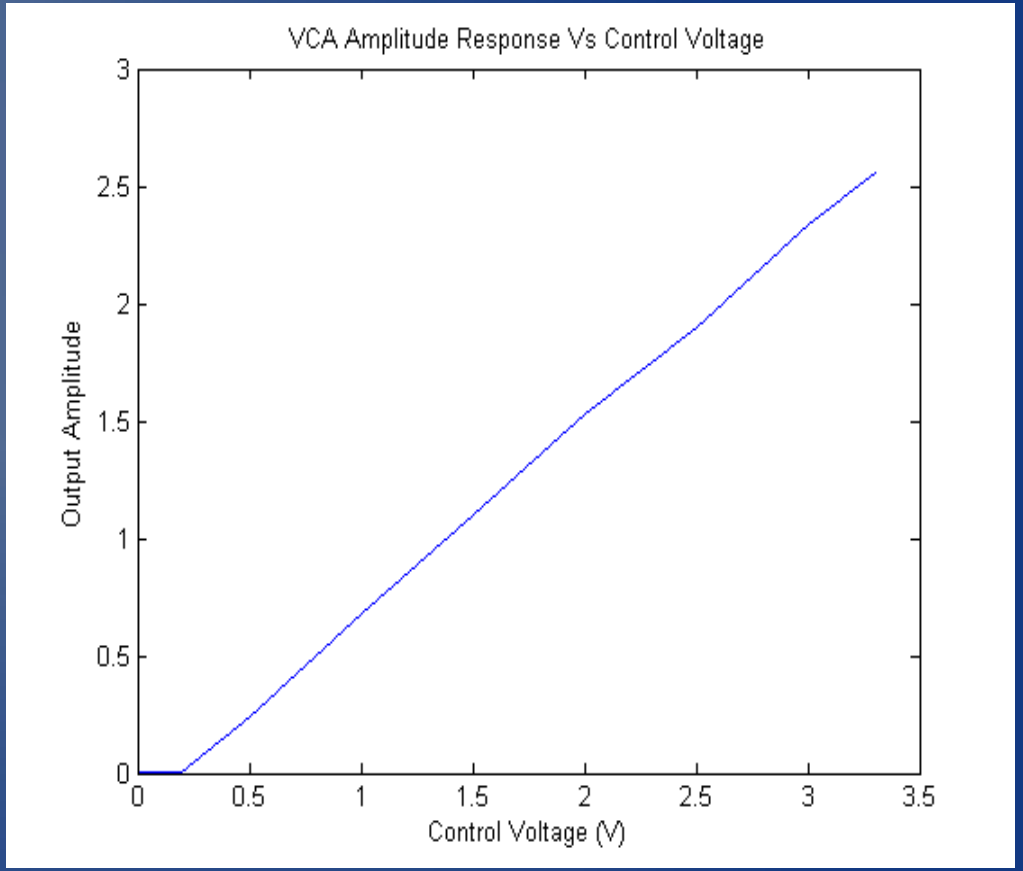

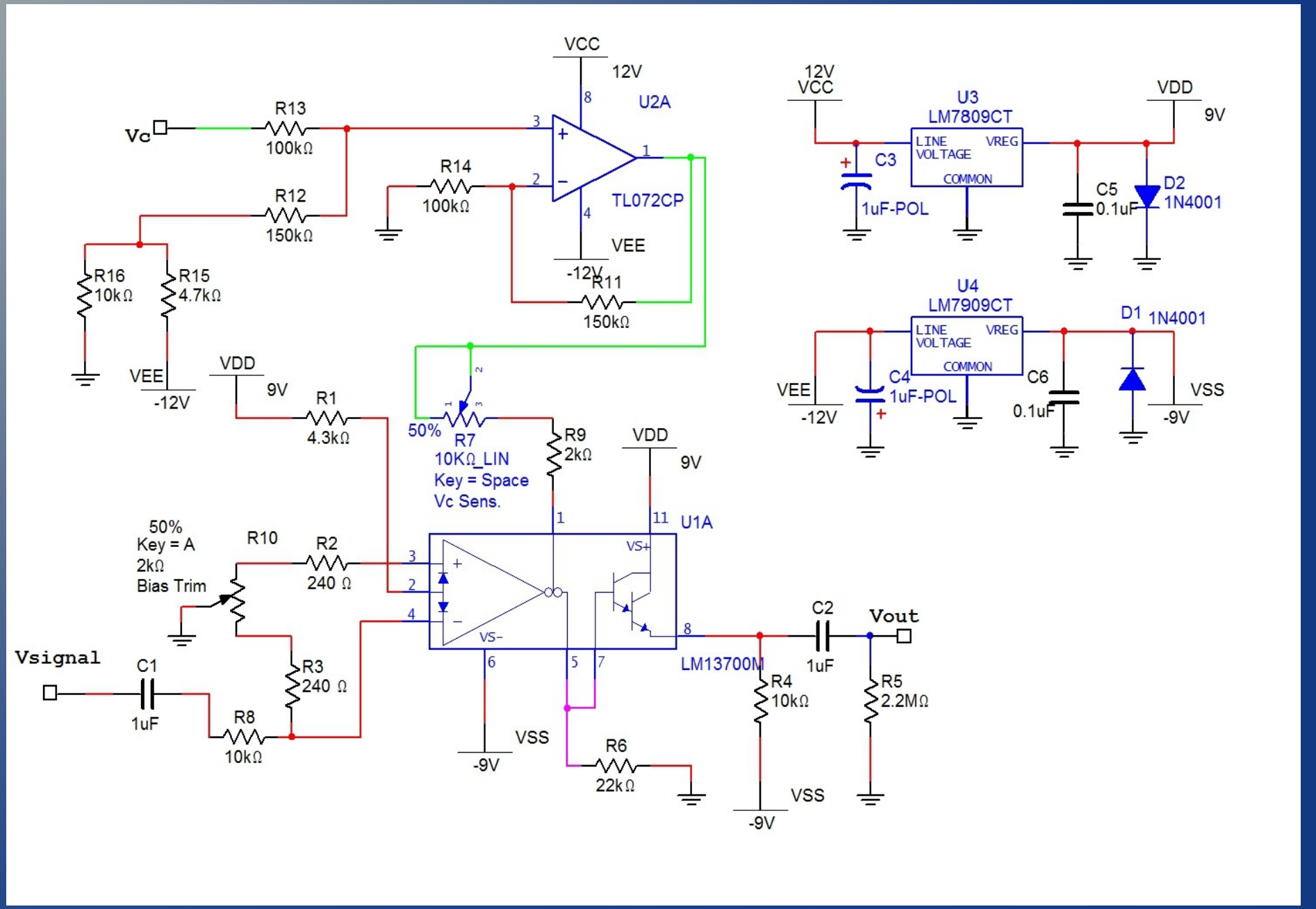
VCC
12V
U2A
Vc
R13
100kΩ
R12
150kΩ
R14
100kΩ
TL072CP
VEE
-12V
R11
150kΩ
R16
10kΩ
R15
4.7kΩ
VEE
-12V
VDD
9V
R1
4.3kΩ
50%
R7
10KΩ_LIN
Key = Space
Vc Sens.
R9
2kΩ
VDD
9V
U1A
50%
Key = A
2kΩ
Bias Trim
R10
R2
240 Ω
R3
240 Ω
Vsignal
C1
1uF
R8
10kΩ
VSS
-9V
R6
22kΩ
LM13700M
C2
1uF
Vout
R4
10kΩ
R5
2.2MΩ
VSS
-9V
12V
VCC
U3
LM7809CT
LINE VOLTAGE
VREG
COMMON
C3
1uF-POL
VDD
9V
C5
0.1uF
D2
1N4001
U4
LM7909CT
LINE VOLTAGE
VREG
COMMON
D1
1N4001
VEE
-12V
C4
1uF-POL
C6
0.1uF
VSS
-9V

Envelope Generator

ADSR – Attack, Decay, Sustain, Release

- Provide a user controlled contour generator
- Wide range of attack/decay/release times - 50ms to 5s
- Will provide user with numerous contour options from short, staccato to slow volume swells
- External controls are
  - Attack time – initial volume rise time
  - Decay time – time to fall to sustain level
  - Sustain level
  - Release time – time to fall to zero volume after note is release (string muted)

General ADSR Shape

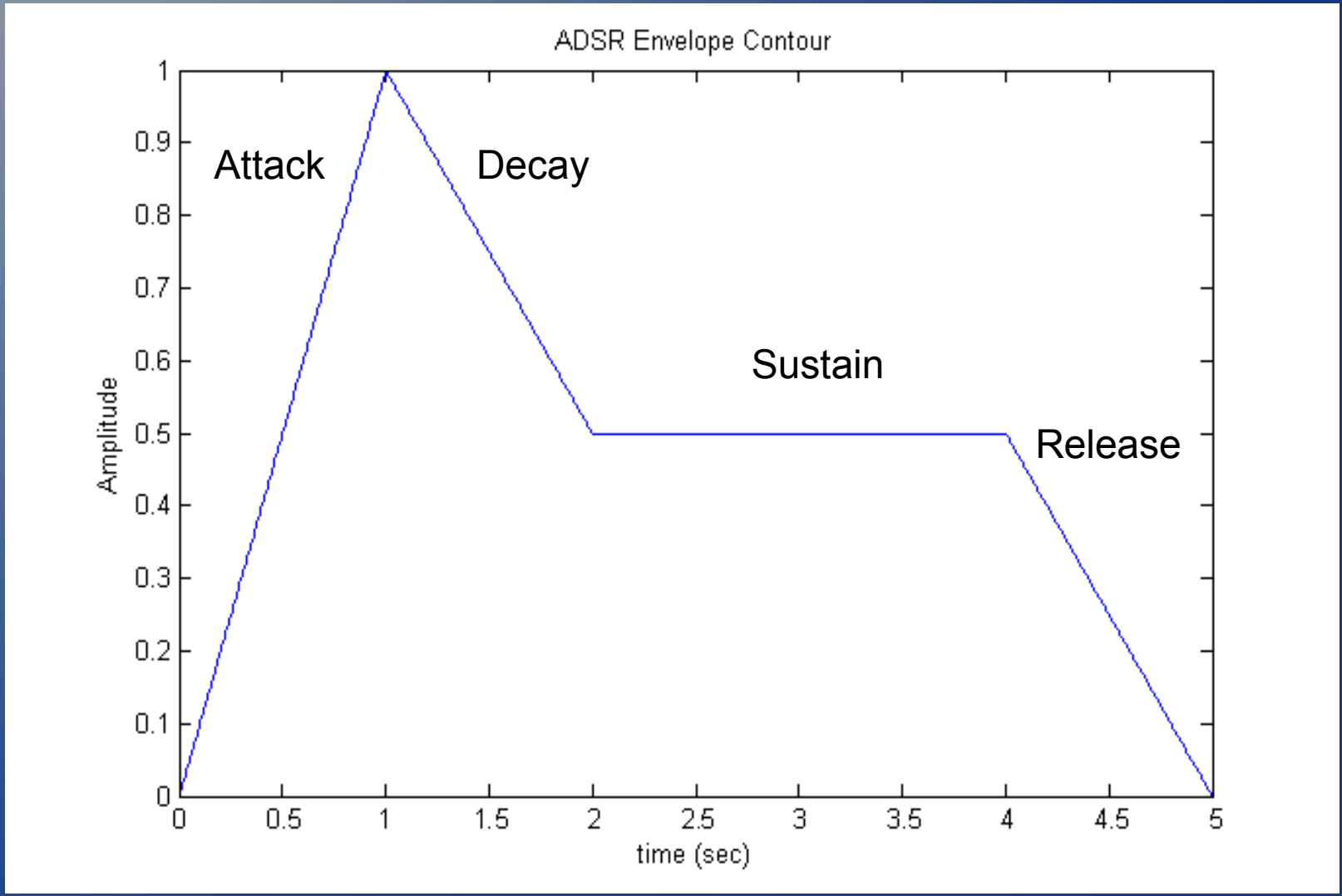

Design

- MSP430F4132
- 6 PWM outputs, one for each channel's contour, 15.6kHz
- Will use 4 ADC pins for reading potentiometer positions
- ADC pins sampled every 32ms
- Will accept triggers and gates for each channel
- Utilizes wave tables for rising and falling exponential curves, simulating analog synthesizer ADSRs
- Also, the ear hears logarithmically, so an exponential shape in volume sounds more linear
- Time is sped up by skipping samples (principle of direct digital synthesis)

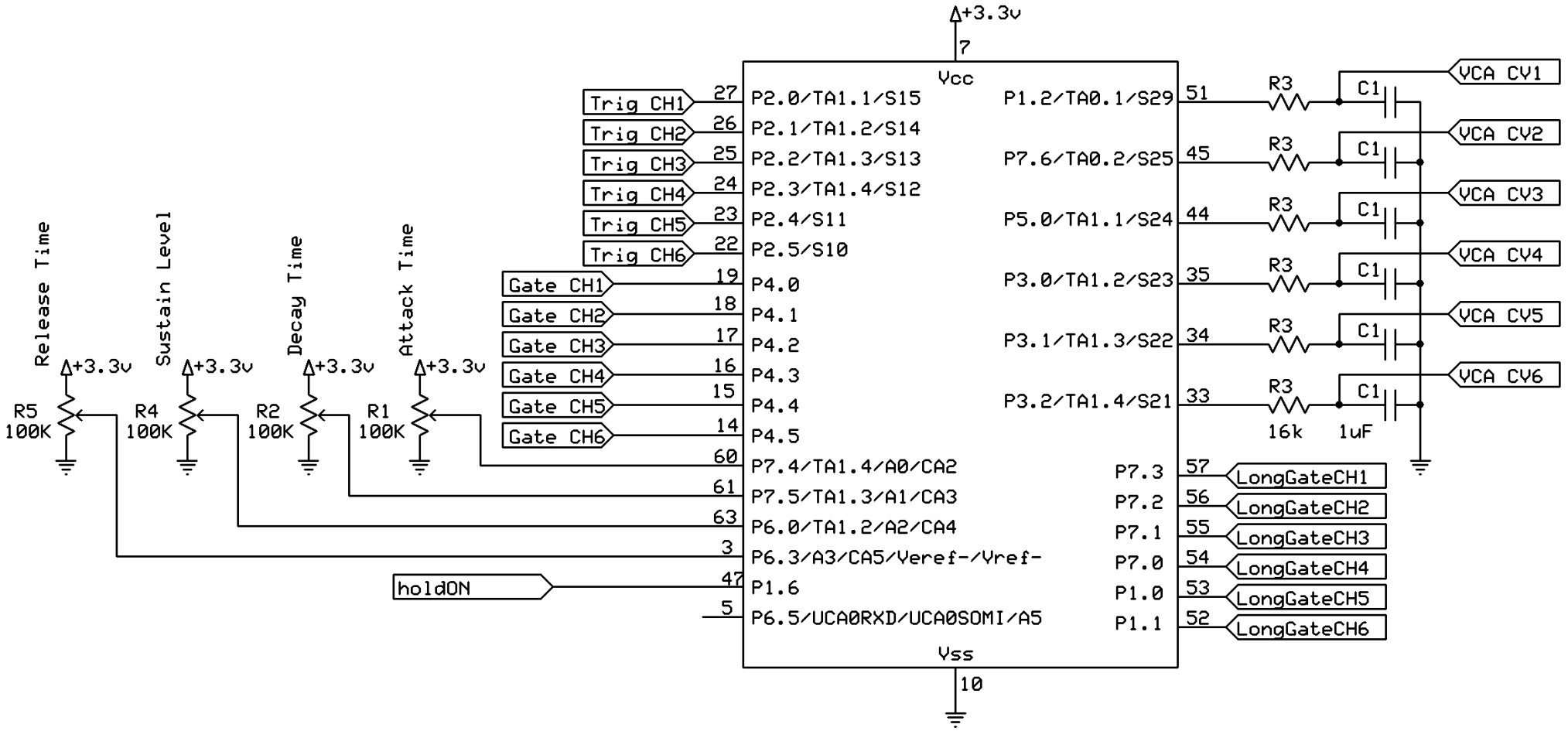

- Triggers as port pin edge interrupts
- Gates as GPIO
- Potentiometers into ADC ports
- PWM outputs filtered at about 10Hz

ADSR Software Flow

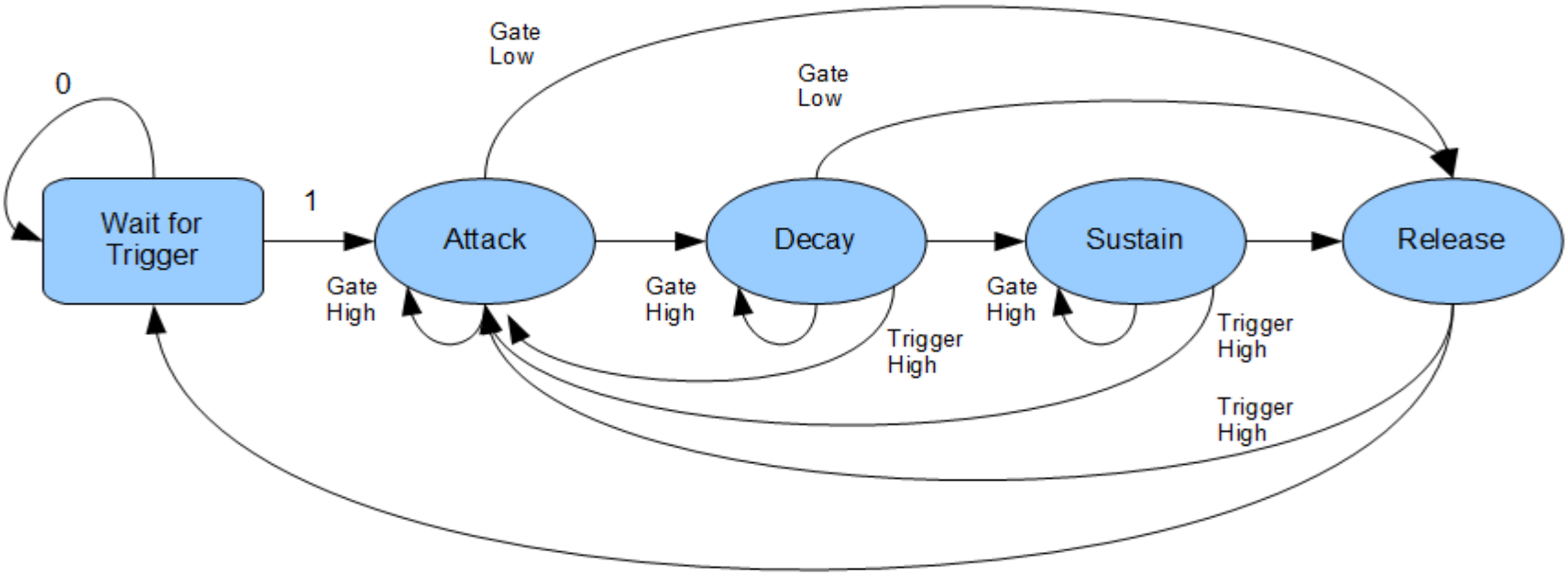

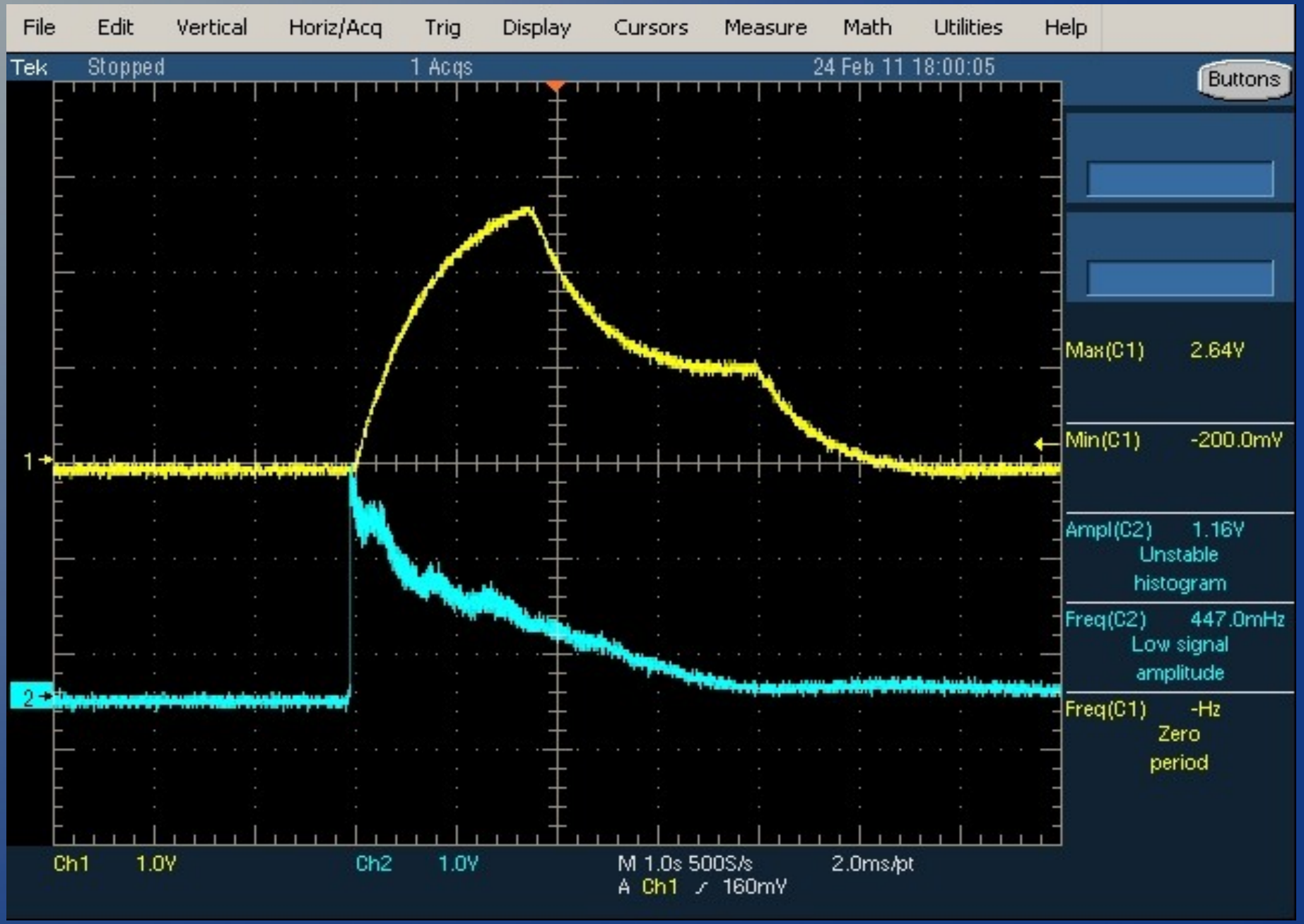
File
Edit
Vertical
Horiz/Acq
Trig
Display
Cursors
Measure
Math
Utilities
Help
Tek
Stopped
1 Acqs
24 Feb 11 18:00:05
Buttons
Max(C1) 2.64V
Min(C1) -200.0mV
Ampl(C2) 1.16V
Unstable
histogram
Freq(C2) 447.0mHz
Low signal
amplitude
Freq(C1) -Hz
Zero
period
1
2
Ch1 1.0V
Ch2 1.0V
M 1.0s 500S/s
2.0ms/pt
A Ch1 ⁄ 160mV

Low Frequency Oscillator

- Based on a Wein-Bridge Oscillator.
- Produces frequencies from 3Hz to 33Hz.
- Produces both a sin wave and square wave oscillation, depending on where the signal is taken from.
- Will be used by vibrato, tremolo and the arpeggiator
- Independent of other designs, tracking is not an important issue.

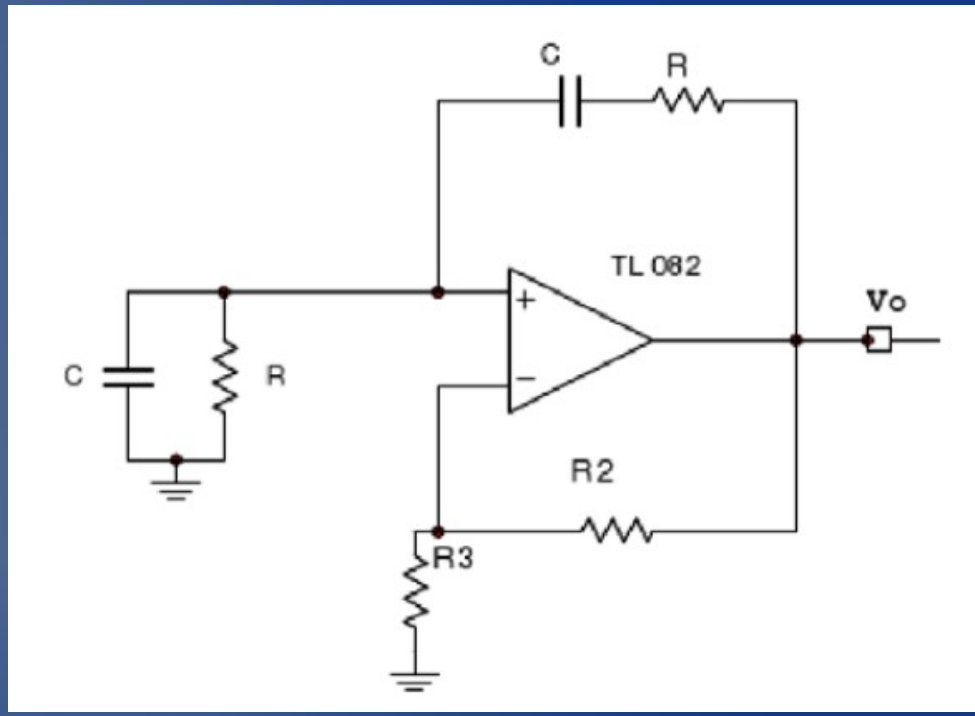

$$F_o = \frac{1}{2\pi RC}$$

LFO Schematic

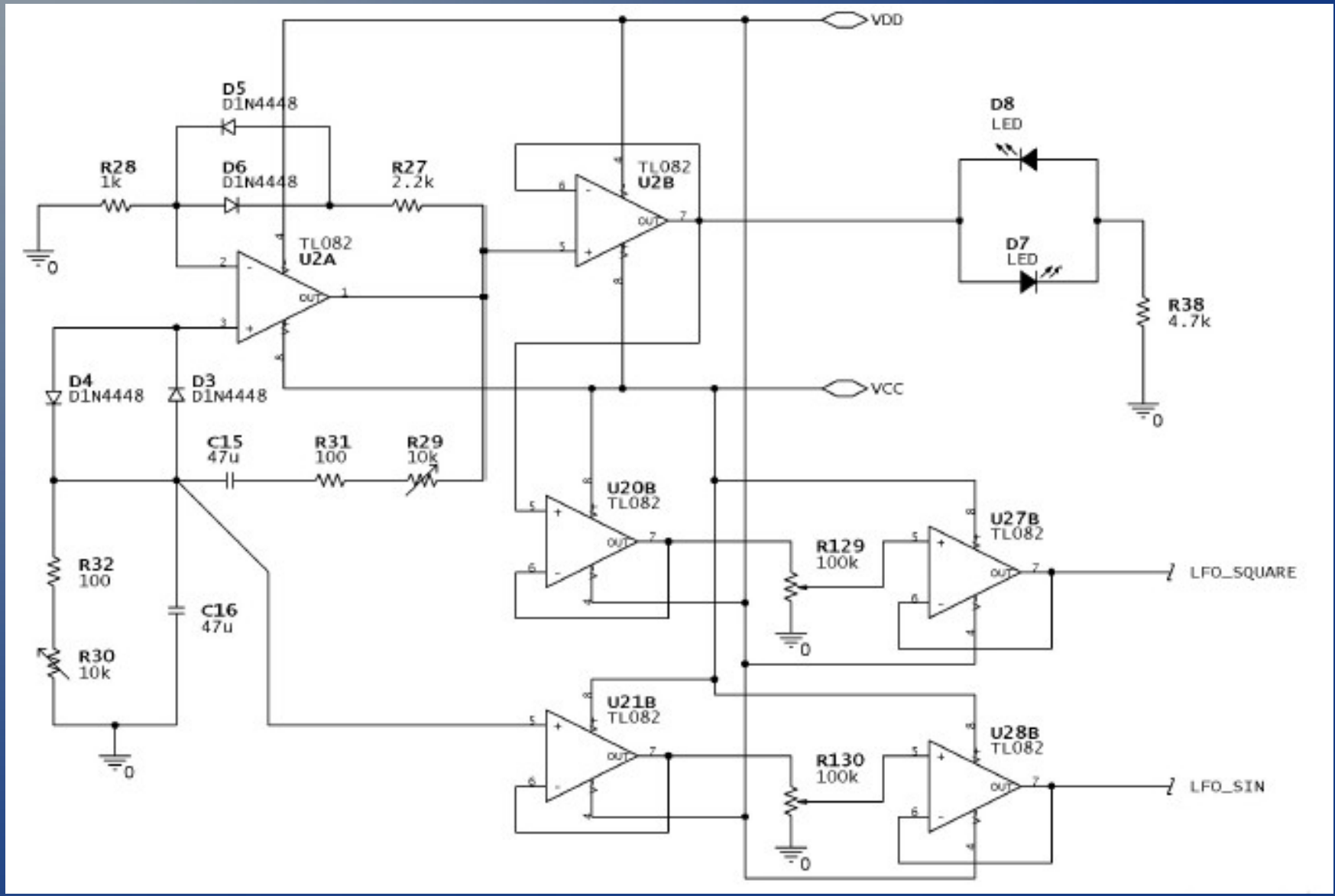

LFO Rate and Depth

- Two potentiometers control the rate of oscillation. If they are Low the new resistance becomes 100 Ohms and the frequency is 33.3Hz. If they are high high the new resistance becomes 1100 Ohms and the frequency is 3.3 Hz.
- The amplitude of the LFO will be controlled independently for each effect.

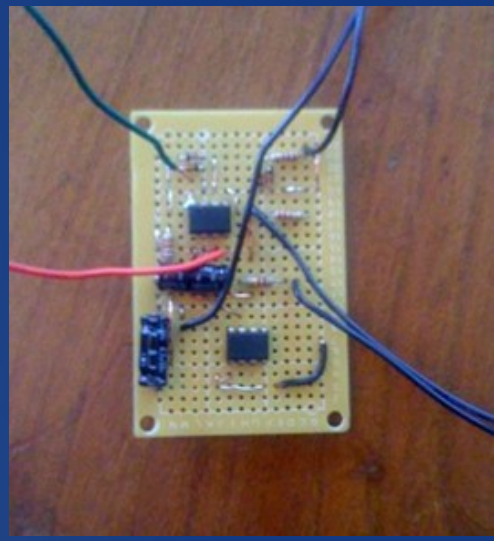

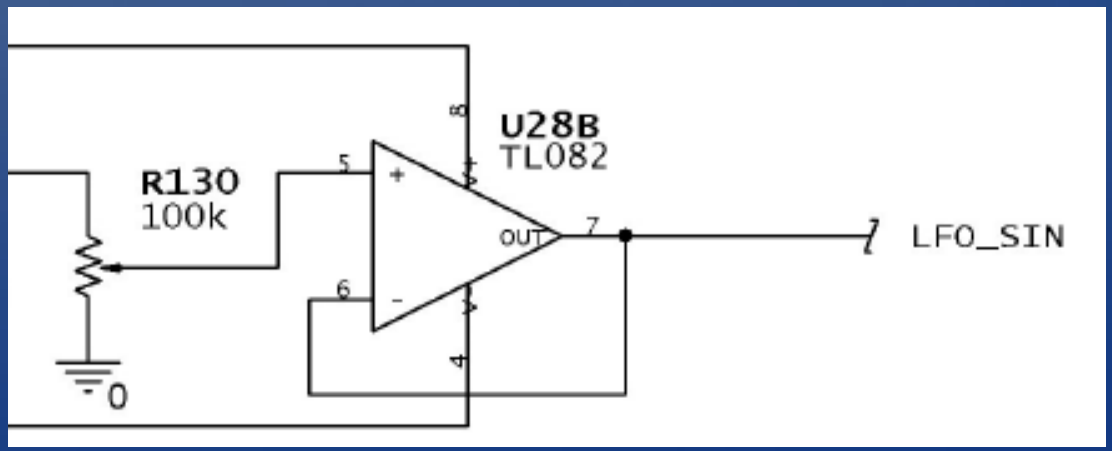

Tremolo

- Rapid increase and decrease in the amplitude (volume) of a signal.
- A signal is buffered from the LFO an adjustable amplitude (depth) and a maximum of 1V pk-pk and is used as the gain control.
- Added with a DC voltage of 1v. If the depth is set at its maximum. The signal will completely be attenuated when the LFO is negative
- The potentiometer is adjusted to minimize the effects of the control signal at the output

Tremolo

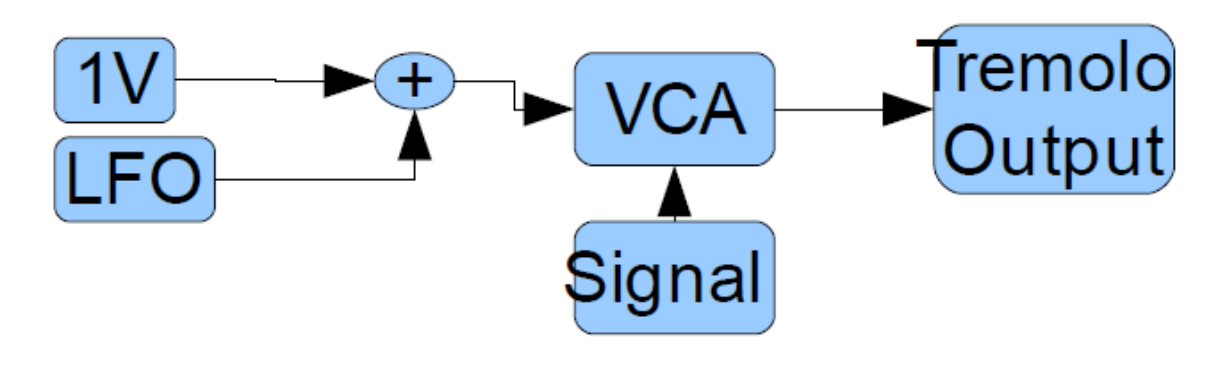
1V
LFO
+
VCA
Tremolo Output
Signal

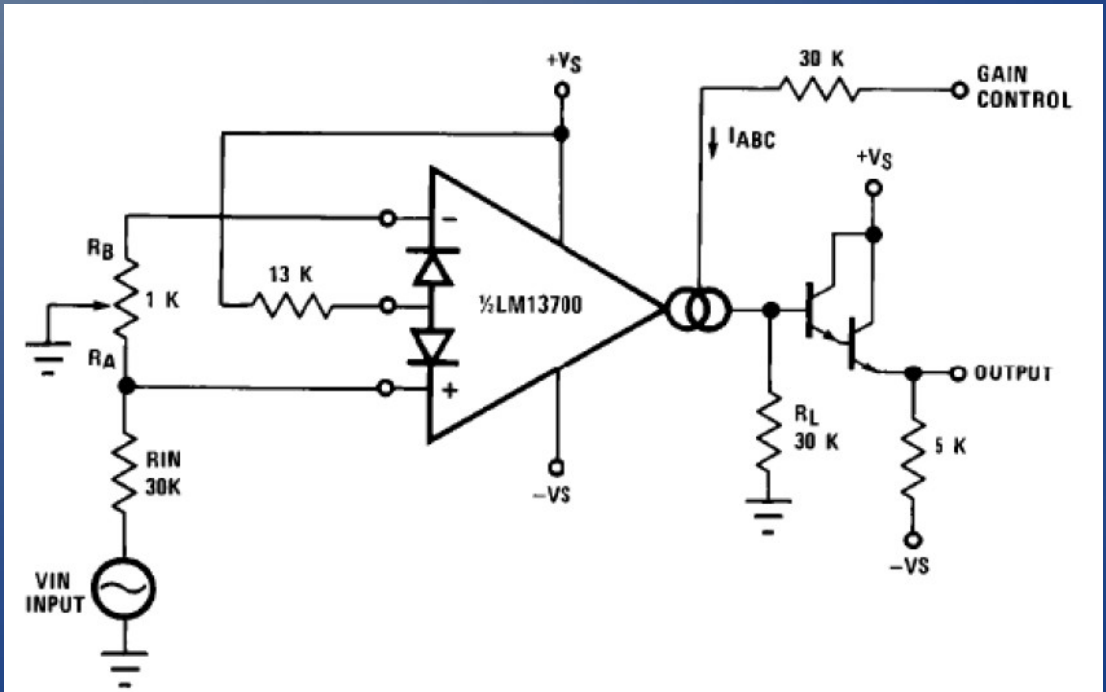
+VS
30 K
GAIN CONTROL
IABC
+VS
RB
1 K
RA
13 K
½LM13700
OUTPUT
RL
30 K
5 K
RIN
30K
-VS
-VS
VIN
INPUT

Tremolo

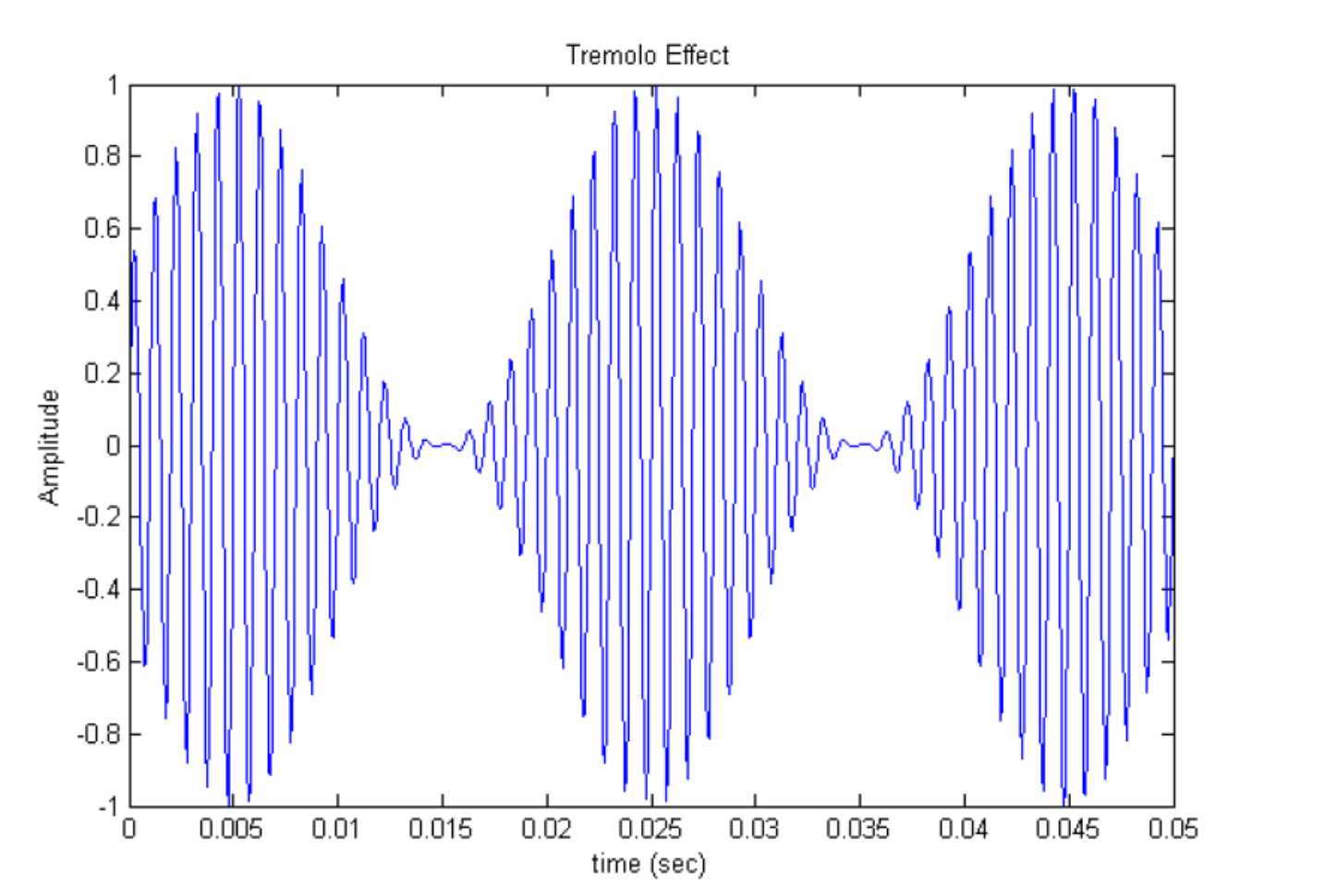

Sine wave LFO applied to control the amplitude of the signal. As the rate is increased on the LFO the rate of modulation changes as well.

Vibrato

- Increase and decrease in frequency (pitch) of a signal.
- This is done by attenuating the signal from the LFO and adding it to the output of the F-V using the summing op-amp configuration.
- Every string has its own independent summer. Resulting in 6 SPDT or 3 DPDT (each controlling two strings) so the effect can be turn on for some strings and off for others

Vibrato

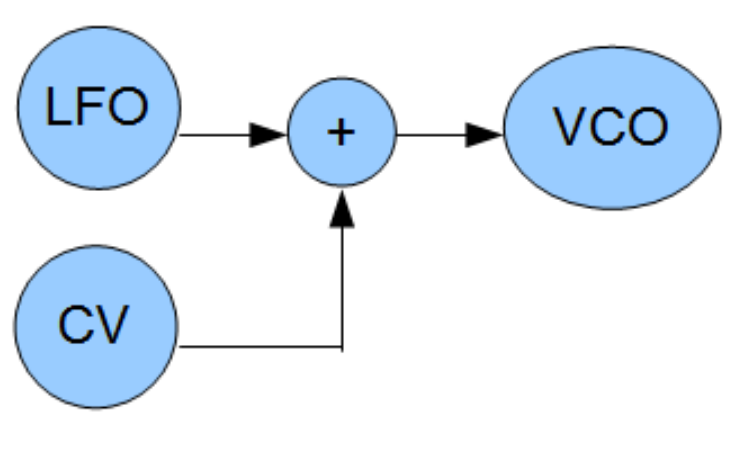

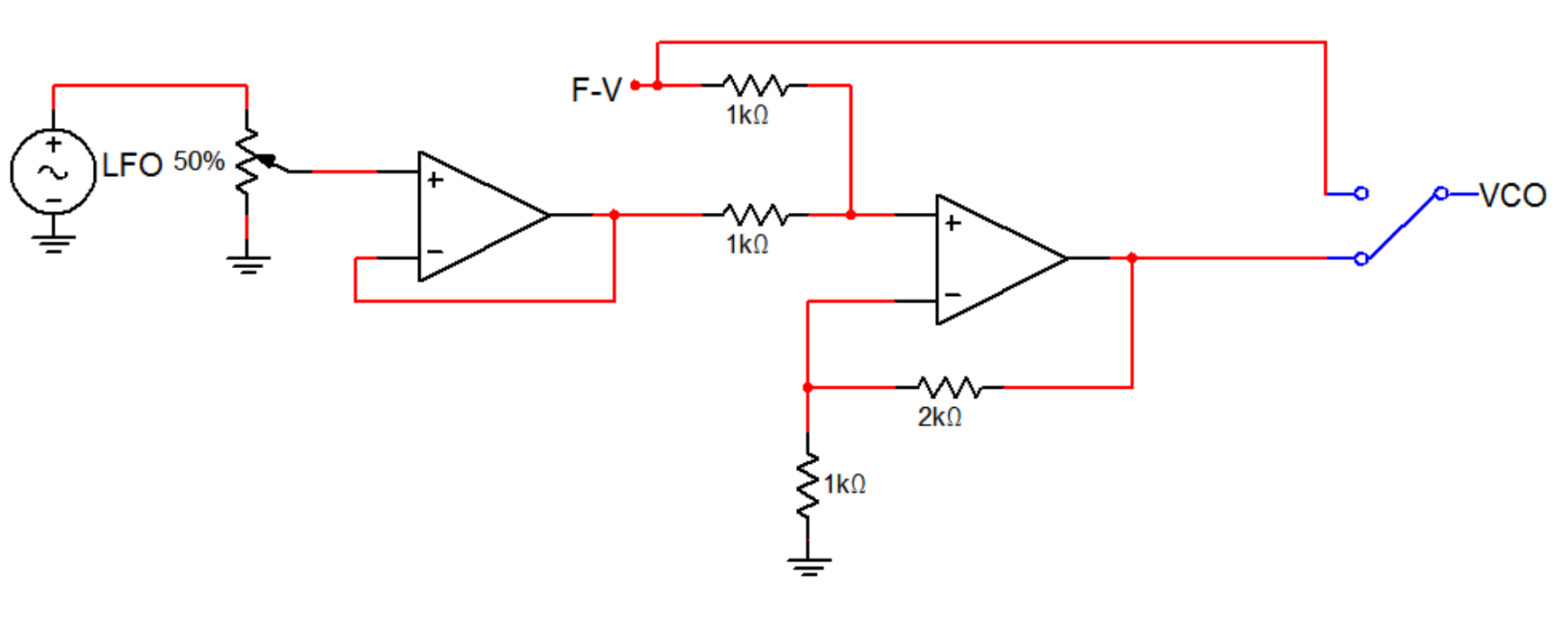

Arpeggiator

- Automatically steps through a sequence of notes based on the input note, thus creating an arpeggio.
- This feature takes advantage of the linearity between the F-V converter and the VCO.
- ex. If an input frequency of 41.20 Hz (E) outputs a dc voltage of 1.6V, in order to hit the next E octave (82.41 Hz) on the VCO the output voltage of 1.6V would need to be doubled to 3.2V.
- Major chord – root, major 3rd, perfect 5th.
- Minor chord – root, minor 3rd, perfect 5th.

Arpeggiator

Note	Ratio	Interval
0	1:1	Unision
1	16:15	Major semitone
2	9:8	Major 2nd
3	6:5	Minor 3rd
4	5:4	Major 3rd
5	4:3	Perfect 4th
6	45:32	Diatonic tritone
7	3:2	Perfect 5th
8	8:5	Minor 6th
9	5:3	Major 6th
10	9:5	Minor 7th
11	15:8	Major 7th
12	2:1	Octave

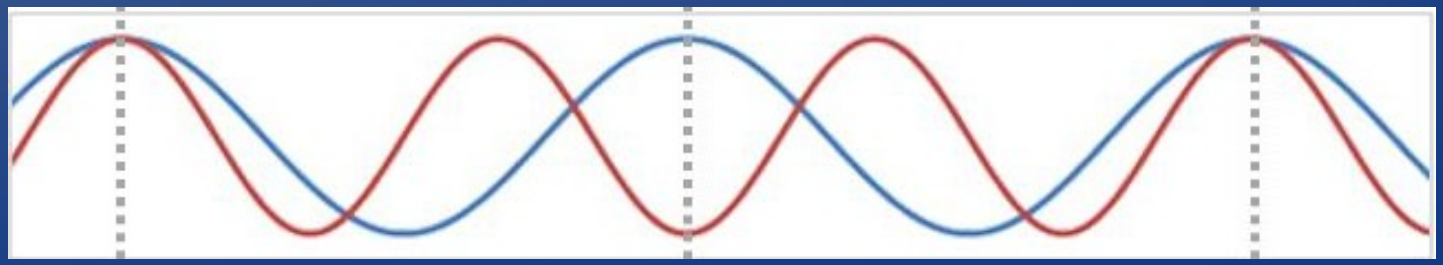

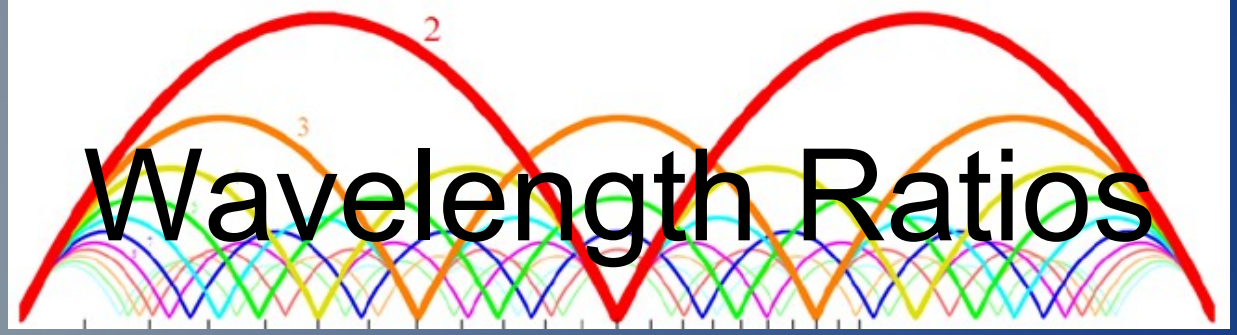

Wavelength Ratios

- Single op-amp non inverting gain configuration takes the F-V signal and applies the appropriate gain to each line
- Root – 1:1 no multiplication required
- Major 3rd – 5:4 requires x 1.25
- Perfect 5th – 3:2 requires x 1.5
- Octave – 2:1 requires x 2
- Analog 4:1 Mux 74FST3253 offers high frequency response with 7.5 nS switching times.
- Operates from -.5v to 7v

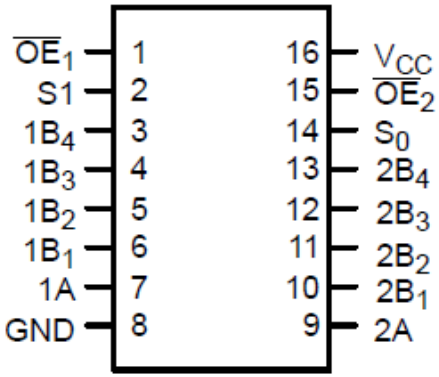

Figure 1. 16–Lead Pinout

S_1	S_0	$\overline{OE}_1$	$\overline{OE}_2$	Function
X	X	H	X	Disconnect 1A
X	X	X	H	Disconnect 2A
L	L	L	L	$A = B_1$
L	H	L	L	$A = B_2$
H	L	L	L	$A = B_3$
H	H	L	L	$A = B_4$

Figure 2. Truth Table

Arpeggiator Block Diagram

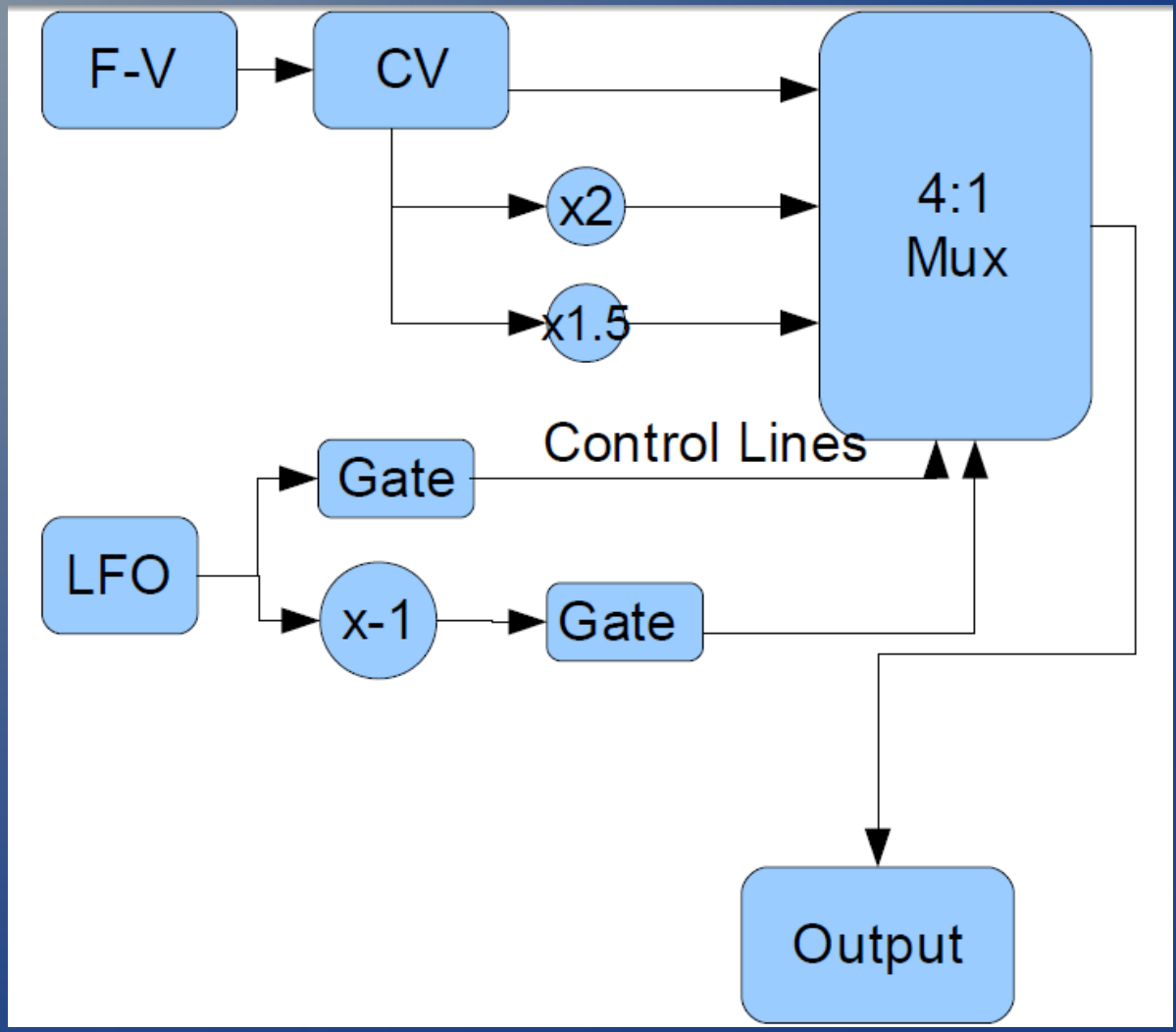

Arpeggiator

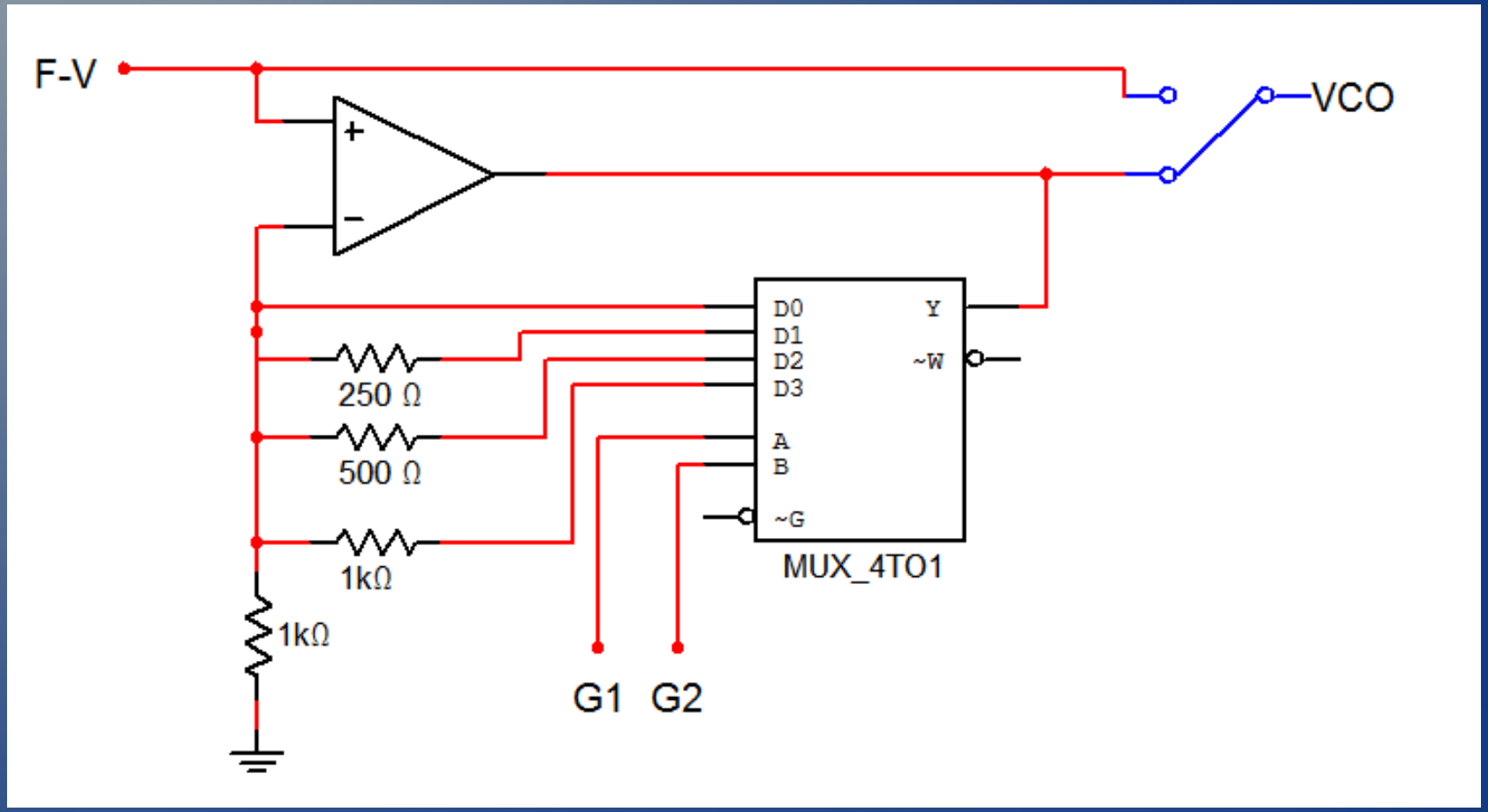

4:1 Mux Control Lines

- Uses a rectified signal from the LFO with a normalized amplitude of 2V through two gates with different adjustable threshold voltages.
- When the LFO voltage is below the threshold voltage G1 the output is Vlow.
- When the LFO voltage is higher the threshold voltage on G1 the gate outputs Vhigh.

Schmitt Trigger Comparator

- There is only 2 gates that control the arpeggiation of all 6 strings.
- Potentiometer controls the threshold voltage and passes it through a comparator.

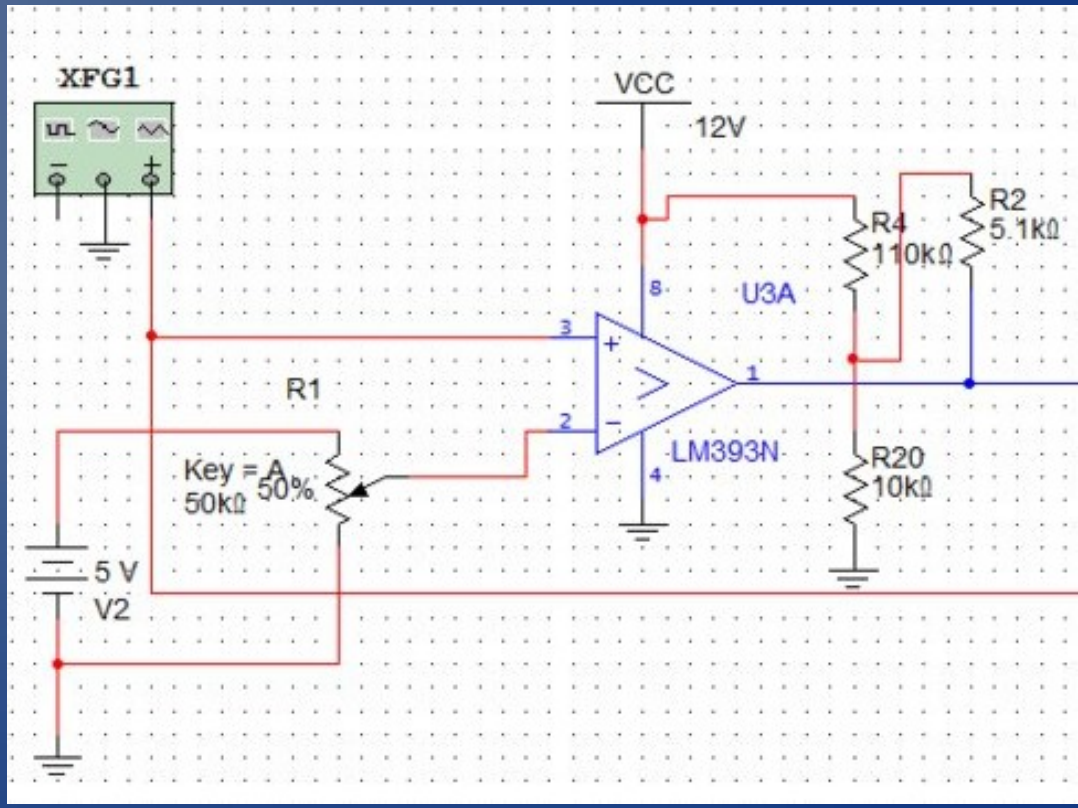

Control Lines

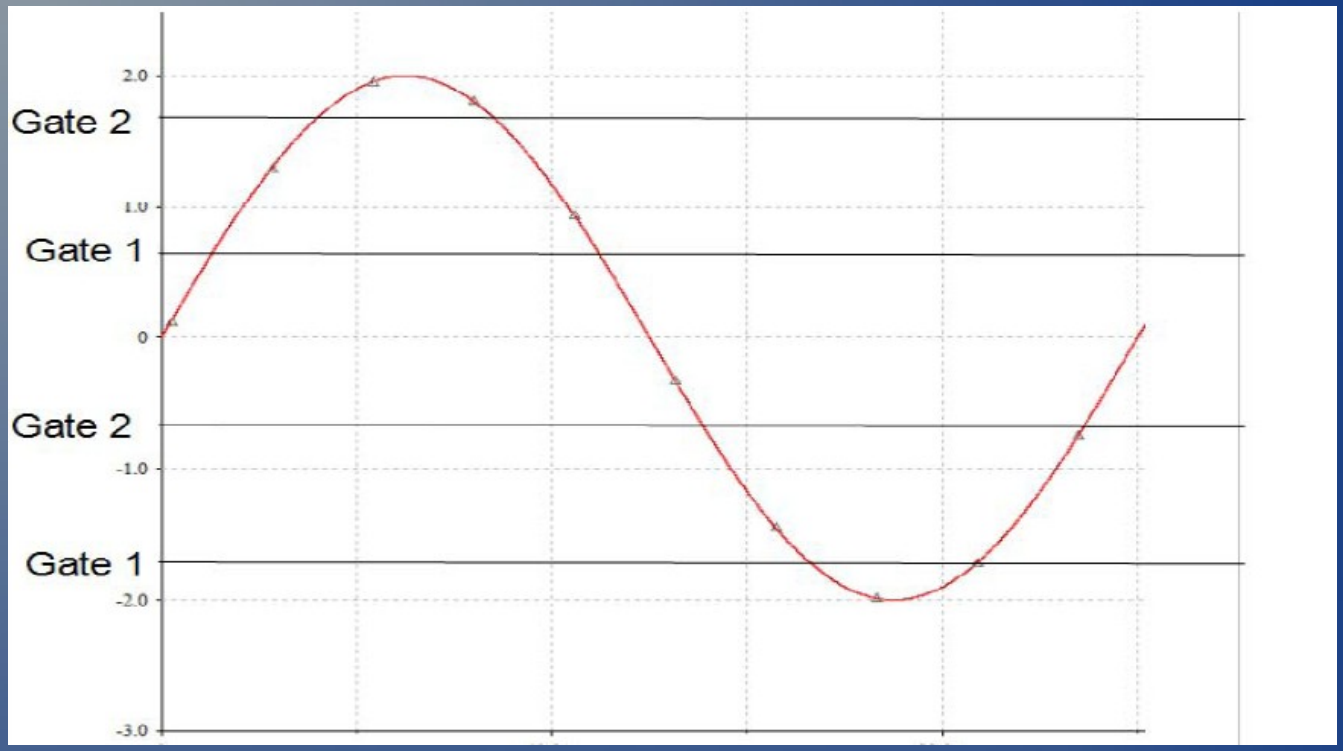

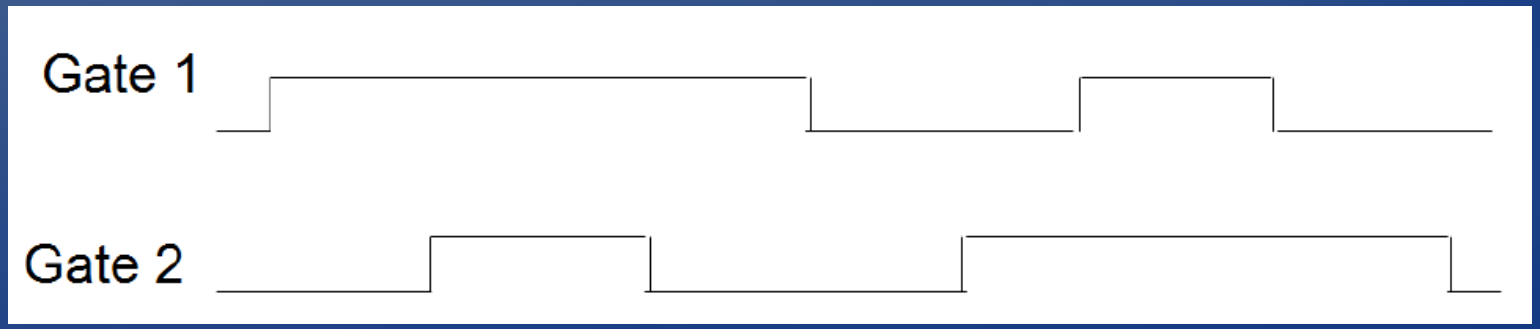

Cutoff and Resonance Filter

- A low pass filter where the user has the ability to tune where the cutoff frequency is (between 10 Hz and 1.2Khz).
- A filter that has the ability for the user to tune how much resonance is desired on the output.
-

CGIC

- Based on Dr. Wasfy Mikhael CGIC LP filter design.
- If G3 is tuned only the resonance changes.
- If G4 or G8 is tuned the gain, cutoff and resonance are affected.

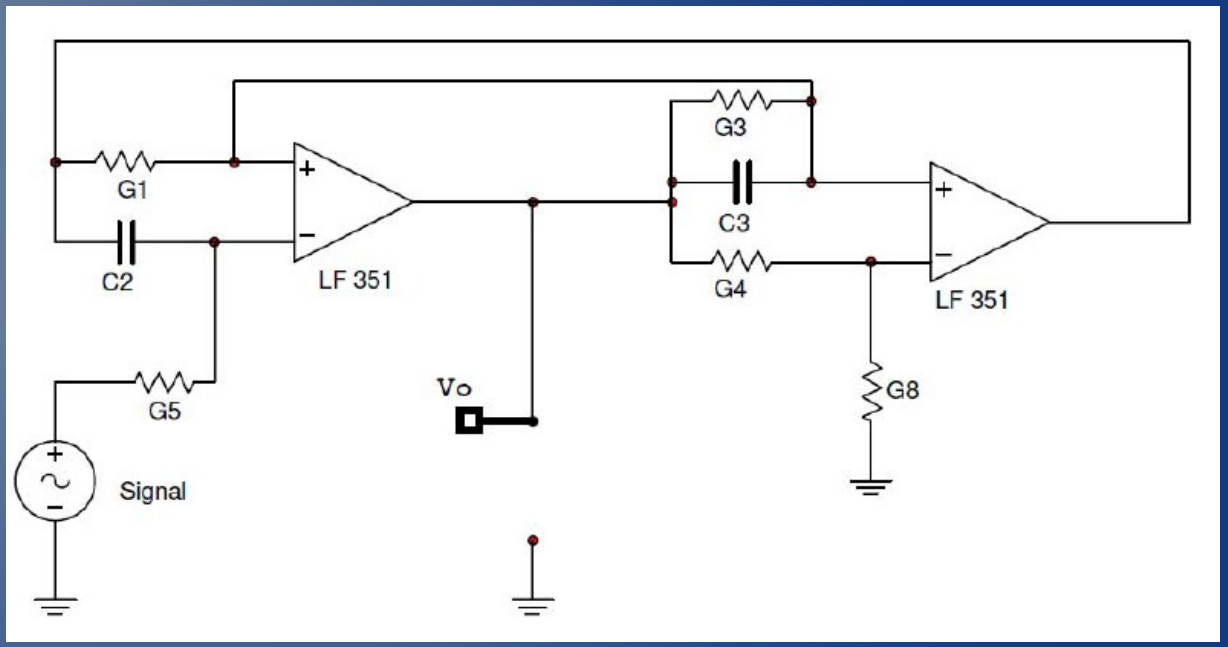

$$T(s)=\frac{1+\frac{G_8}{G_4}}{s^2\frac{C_2C_3G_8}{G_1G_5G_4}+s\frac{C_2G_3G_8}{G_1G_5G_4}+1}$$

$$w_p^2=\frac{G_1G_5G_4}{C_2C_3G_8}$$

$$Q_p^2=\frac{C_3G_1G_4G_5}{C_2G_3^2G_8}$$

CGIC

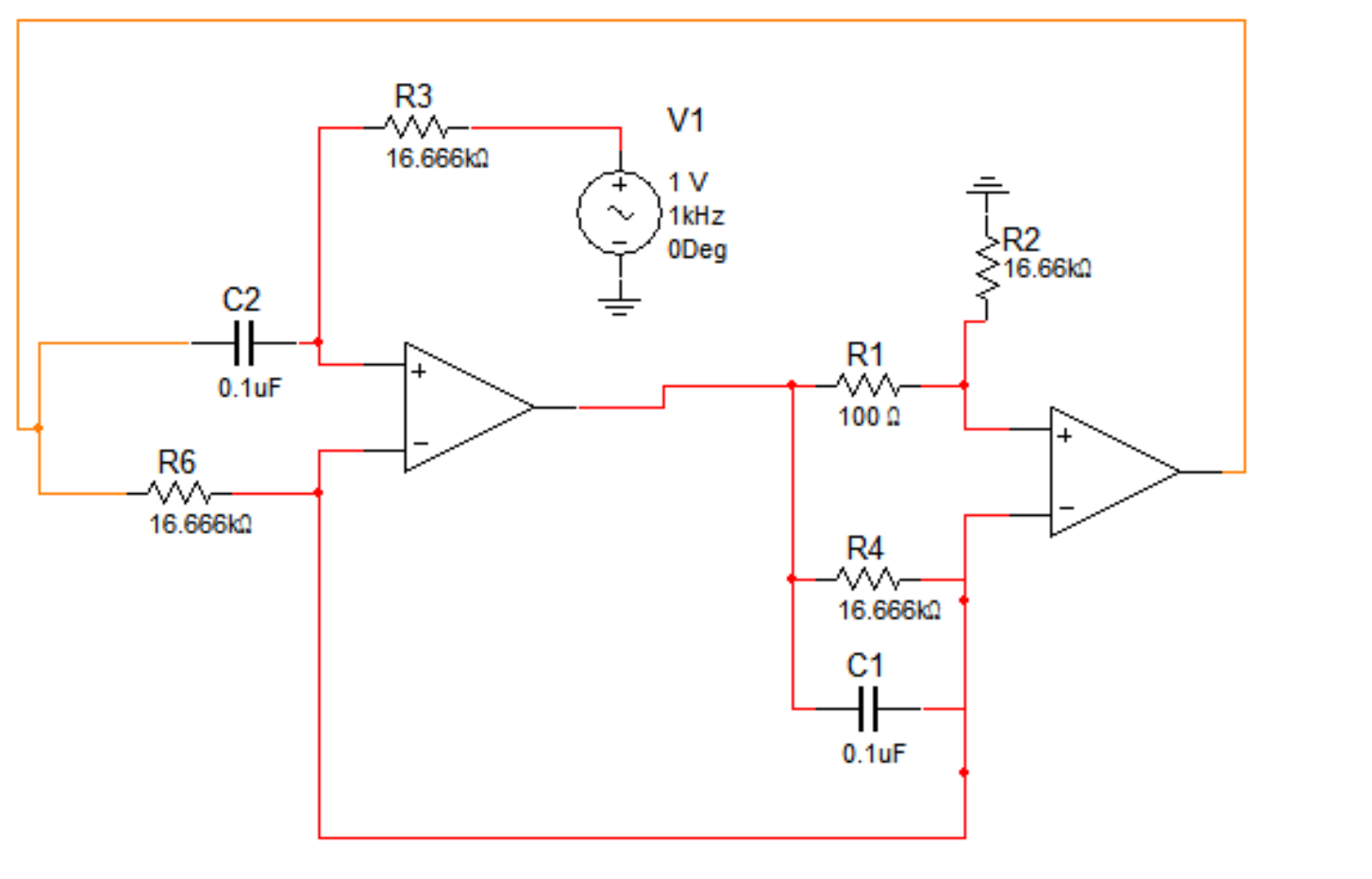
R3
16.666kΩ
V1
1 V
1kHz
0Deg
R2
16.66kΩ
C2
0.1uF
R1
100 Ω
R6
16.666kΩ
R4
16.666kΩ
C1
0.1uF

Cutoff and Resonance

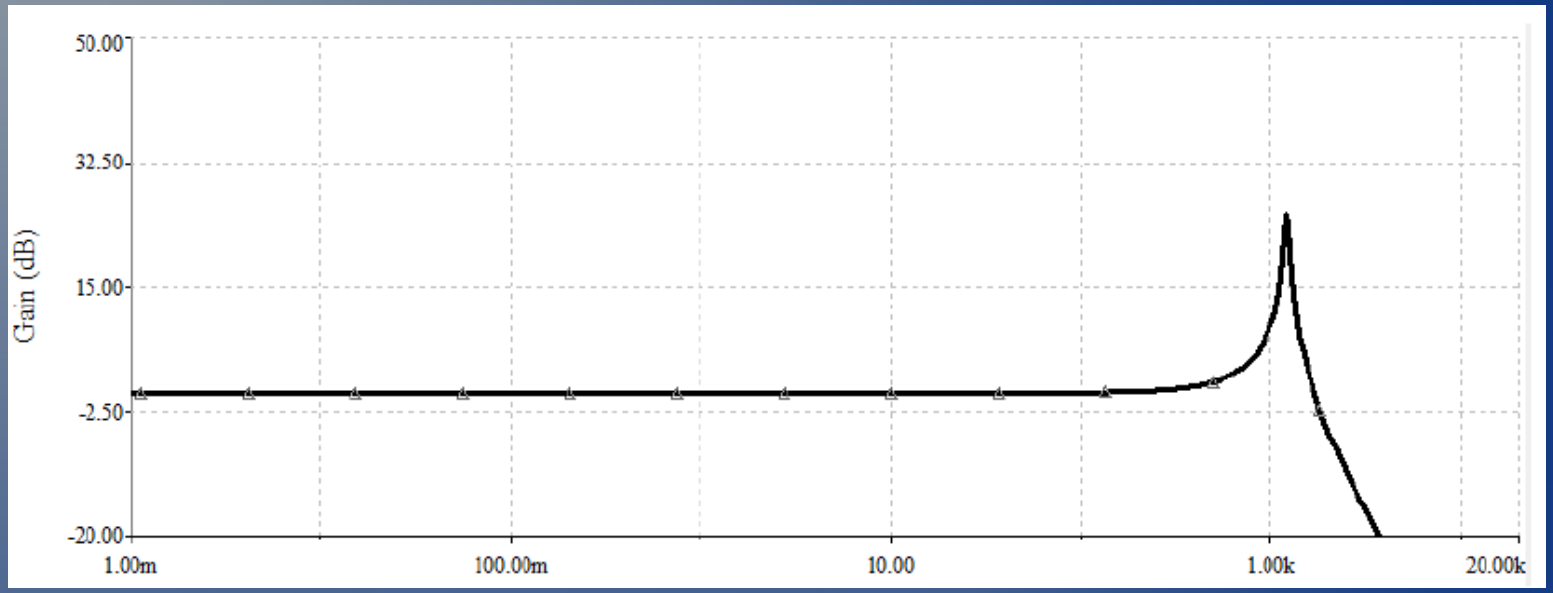

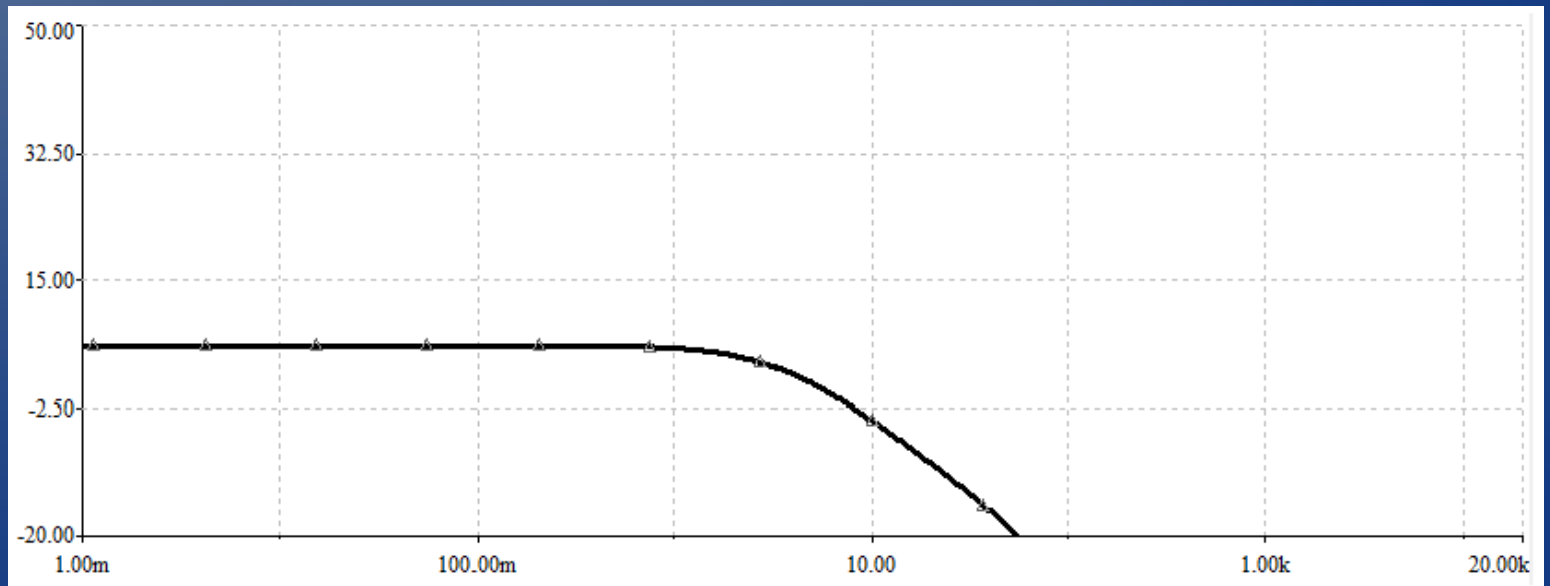

Power Supply Requirements

- Supply +/-12Vdc and +3.3Vdc
- 1.0A<A<2.0A from +/-12V supply
- 250mA<A<1.0A from +5V supply

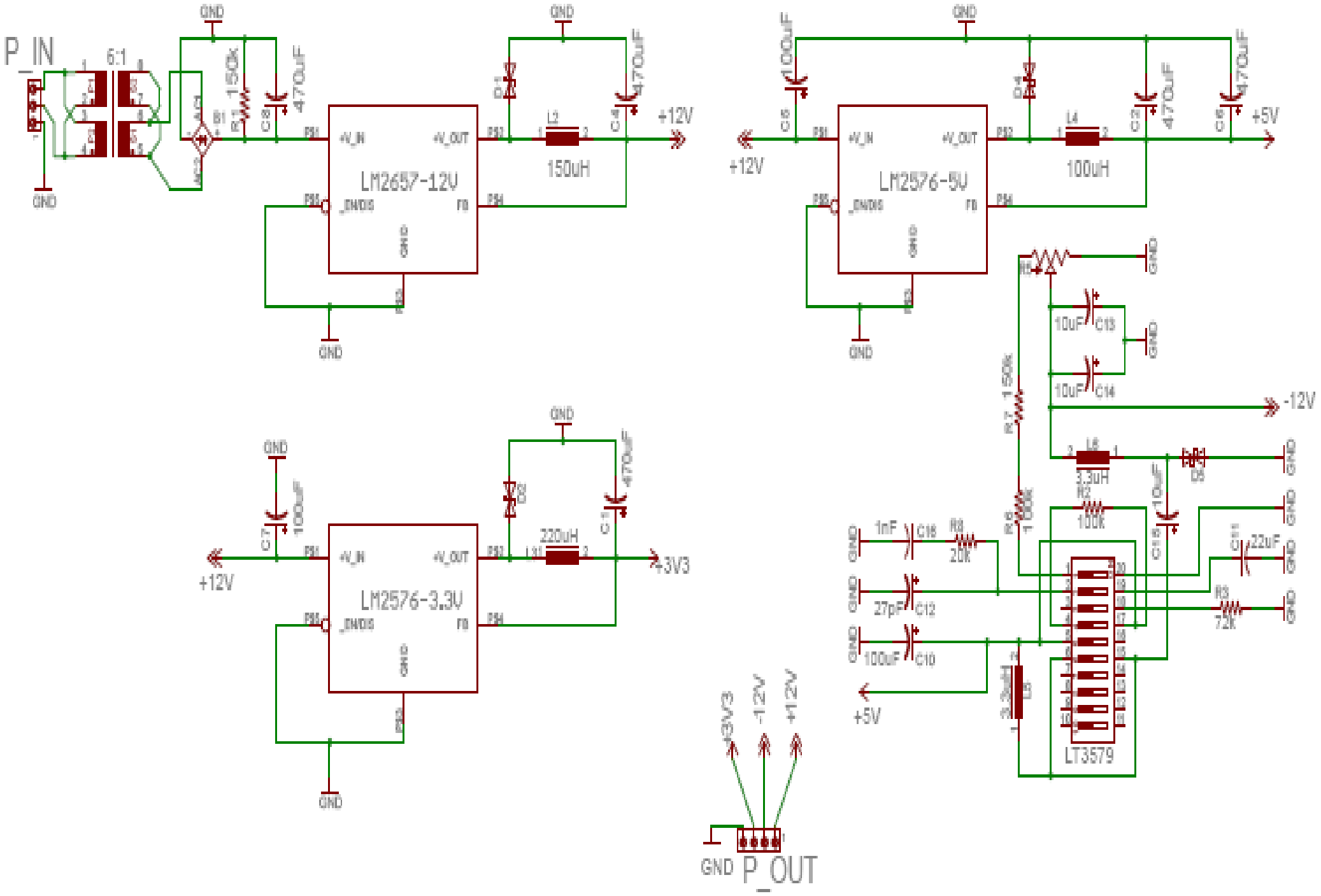

P_IN
6:1
GND
150k
470uF
LM2657-12V
+V_IN
+V_OUT
_EN/DIS
FB
150uH
+12V
100uF
LM2576-5V
100uH
+5V
10uF
-12V
3.3uH
100k
1nF
20k
27pF
22uF
72k
LT3579
LM2576-3.3V
220uH
+3V3
P_OUT

Bill of Materials

Part	Qty.	Cost ea.	# Bought	$ Spent	Projected Cost
ICs					
LM13700	8	$1.50	8	$12.00	$12.00
511-TL081CN	40	$0.58	20	$11.16	$23.20
LM2902KNE4	6	$0.51	6	$3.06	$3.06
LM2907	6	$1.86	2	$3.72	$11.16
TL072	2	$0.69	0	$0.00	$1.38
TL074	5	$0.99	0	$0.00	$4.96
NJM13700M	3	$1.02	3	$3.06	$3.06
LM339	3	$0.49	0	$0.00	$1.47
MSP430F4132	1	$4.56	1	$4.56	$4.56
UA78L09ACLP	1	$0.58	0	$0.00	$0.58
KA7909TU	1	$0.63	0	$0.00	$0.63
LM2576	2	$2.24	2	$4.48	$4.48
LM79M12	1	$0.61	1	$0.61	$0.61
LT1026	1	$2.50	1	$2.50	$2.50
4:1 Multiplexer	1	$7.00	1	$7.00	$7.00
Total				$52.15	$80.65
Small Components					
Resistors	556	$0.06	0	$0.00	$33.34
Capacitors	73	$0.19	0	$0.00	$13.87
Inductors	2	$0.28	2	$0.56	$0.56
Schottky Diodes	2	$1.00	2	$2.00	$2.00
1N4148 Diodes	10	$0.02	0	$0.00	$0.20
1N4001	2	$0.16	0	$0.00	$0.32
LEDs	12	$0.10	0	$0.00	$1.20
Total				$0.00	$51.49
Potentiometers					
Trim Pot	32	$0.50	0	$0.00	$16.00
Panel Pot	4	$1.25	0	$0.00	$5.00
Slide Pot	12	$2.08	12	$24.96	$24.96
Total				$24.96	$45.96

Boards					
Dev Board	1	$4.30	1	$4.30	$4.30
LQFP 64 PCB Adapter	1	$1.75	1	$1.75	$1.75
Through-hole PCB	5	$3.00	1	$3.00	$15.00
Copper-plated Board	6	$5.00	0	$0.00	$30.00
Total				$9.05	$51.05
Hardware					
DPDT Toggle Switch	7	$2.92	6	$17.52	$20.44
SPDT Toggle Switch	1	$0.00	1	$0.00	$0.00
Heat Sinks	3	$0.85	3	$2.55	$2.55
Transformer	1	$8.35	1	$8.35	$8.35
AlNiCo Magnets and Magnetic wire		$10.00	1	$10.00	$10.00
VGA Connectors	1	$6.00	1	$6.00	$6.00
VGA Cable	1	$0.00	1	$0.00	$0.00
Power Supply Box	1	$6.00	0	0	$6.00
Power Supply Tri-Cable	1	$8.00	0	$0.00	$8.00
Total				$44.42	$61.34
			Initial Estimate	Total Spent	Projected Total
			$212.04	$130.58	$290.49